卷册检索号 SEARCH NO. OF THE VOLUME
MLHVDC-LCS-ECI-DD-SG-S0302 30-B003701S-S0302

第 1 页 共 1 页
PAGE OF

图纸文件目录（首页）

CATALOG OF DRAWING DOCUMENTS (HEAD PAGE)

拉合尔±660kV换流站 工程 施工图 阶段
±660kV Lahore Converter Station PROJECT Detail Design DESIGN STAGE

水布 专业 第 03 卷 第 02 册
Hydraulic SPECIALITY VOLUME BOOK

卷册名称 雨水泵站布置图
Volume name Rain pump station layout

批 准 APPROVED BY	
审 核 REVIEWED BY	
设计/勘测 DESIGNED BY/ SURVEYED BY	陈叶青
图 纸 11 张 DRAWING NOS.	打印件 0 本 PRINTED COPIES NOS.

序号 No.	图 号 DRAWING NO.	文件名称 DOCUMENT TITLE	版本 EDITION	张 NOS.	本 NOS.	备注 REMARKS
1	30-B003701S-S0302-001	雨水泵站系统图	A	1		
		Rain pump station system diagram				
2	30-B003701S-S0302-002	雨水泵站平面布置图	A	1		
		Rain pump station layout plan				
3	30-B003701S-S0302-003	雨水泵站剖面布置图	A	1		
		Rain pump station section layout				
4	30-B003701S-S0302-004	雨水大泵外形安装图	A	1		
		Large flow Rain pump shape & installation diagram				
5	30-B003701S-S0302-005	雨水小泵外形安装图	A	1		
		Small flow Rain pump shape & installation diagram				
6	30-B003701S-S0302-006	雨水泵站拦污栅安装图	A	1		
		Rain pump station trash rack installation diagram				
7	30-B003701S-S0302-007	雨水泵站闸门启闭机安装图	A	1		
		Rain pump station gate hoist installation diagram				
8	30-B003701S-S0302-008	绿化水泵安装图	A	1		
		Green water pump installation diagram				
9	30-B003701S-S0302-009	潜水排污泵安装图	A	1		
		Submersible sewage pump installation diagram				
10	30-B003701S-S0302-010	弯管焊接支座详图	A	1		
		Curved pipe welding support detail				
11	30-B003701S-S0302-011	雨水泵站材料表	A	1		
		Rain pump station material table				

注:

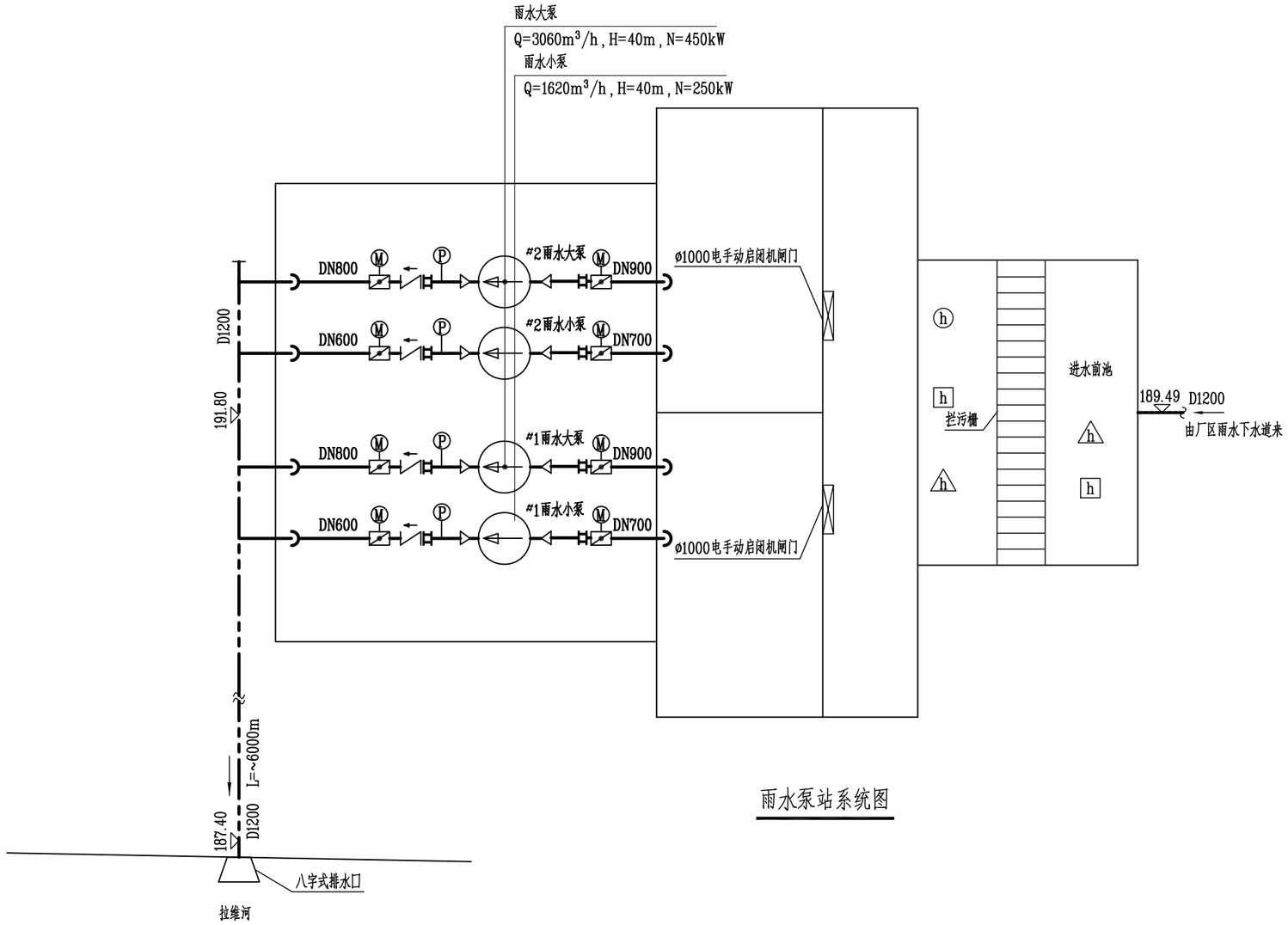

雨水泵站系统图

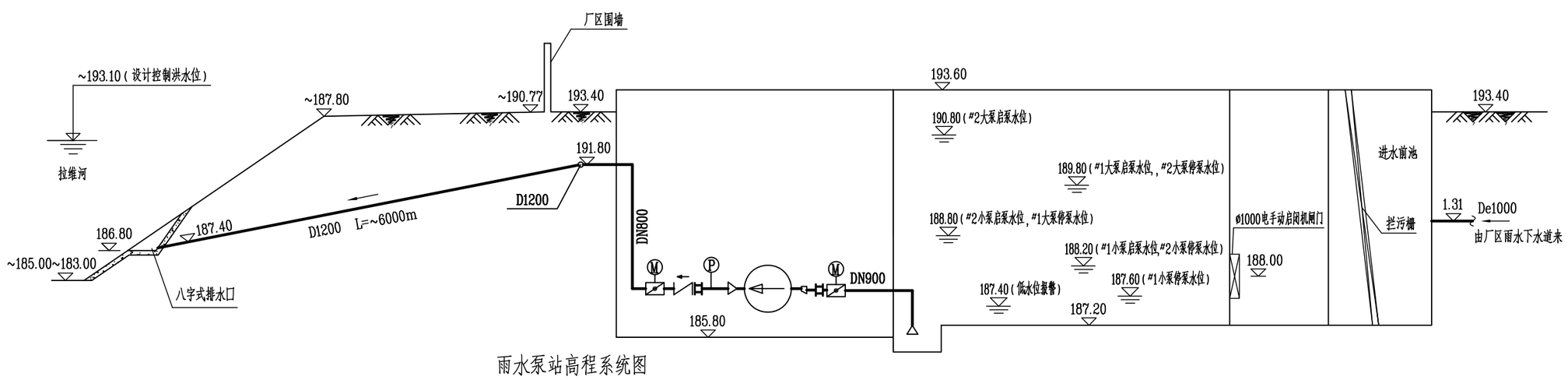

雨水泵站高程系统图

图　　例

	水泵		拦污栅
	电动蝶阀		止回阀
	双法兰传力伸缩节		大小头
	偏心大小头		压力计
	雨水管线（钢管）		雨水管线（预应力钢筋混凝土管）
	雨水管线（钢筋混凝土管）	h	连锁的水位测点
h	报警水位测点	h	显示的水位测点

说明：

1、本图卷册标高采用EGM2008高程系统，单位以m计。站区场地平均标高为193.40m，站内道路及换流变广场标高为193.60m。

2、 图中钢管及预应力钢筋混凝土管所注管道标高为管中心标高；排水管所注管道标高为管内底标高。

3、雨水泵（共4台）与水位连锁要求：

1） 水位升至188.10m，#1雨水小泵启动，水位降至187.50m，#1雨水小泵停泵。

2） 水位继续升至188.70m，#2雨水小泵启动，水位降至188.10m，#2雨水小泵停泵。

3） 水位继续升至189.70m，#1雨水大泵启动，水位降至188.70m，#1雨水大泵停泵。

4） 水位继续升至190.70m，#2雨水大泵启动，水位降至189.70m，#2雨水大泵停泵。

5） 上述水位数值可根据实际情况调整。

4、就地控制柜（在雨水泵站旁）可就地手动操作（开、关）4台雨水泵，且就地盘显示：

1） 雨水泵（4台）状态（开、关、故障）；

2） 雨水进水前池水位；

3） 设备处显示雨水泵（4台）出口压力。

5、就地及水网DCS报警：

1） 雨水进水前池水位过低（187.40m）；

2） 雨水进水前池水位过高（192.40m）；

Notes:

1、EGM2008 elevation is adopted in this volume,unit of elevation is m.Average elevation of outdoor ground is 193.40m,and that of road and converter transformer square is 193.60m.

2、In the figure, the pipe height of the steel pipe and the prestressed reinforced concrete pipe is the pipe center elevation; the pipe height of the pipe is the elevation of the pipe bottom.

3、Rainwater pump (4 sets in total) and water level interlocking requirements:

1) The water level rises to 188.10m, #1 Small flow rain water pump starts, the water level drops to 187.50m, #1 Small flow rain water pump stops.

2) The water level continues to rise to 188.70m, #2 Small flow rain water pump starts, the water level drops to 188.10m, #2 Small flow rain water pump stops.

3) The water level continues to rise to 189.70m, #1 Large flow Rain pump starts, the water level drops to 188.70m, #1 Large flow Rain pump stops.

4) The water level continues to rise to 190.70m, the #2 Large flow Rain pump starts, the water level drops to 189.70m, and the #2 Large flow Rain pump stops the pump.

5) The above water level values can be adjusted according to actual conditions.

4、The local control cabinet (next to the rainwater pumping station) can manually operate (open and close) 4 rainwater pumps on site and display the ground plate:

1) Rainwater pump (4 units) status (on, off, fault);

2) the water level before the rainwater enters the water;

3) The rainwater pump (4 units) outlet pressure is displayed at the equipment.

5、 local and water network DCS alarm:

1) The water level in the pool before the rainwater enters the water is too low (187.40m);

2) The water level in the pool before the rainwater enters the water is too high (192.40m);

3) The water level difference before and after the rainwater inlet tank is more than 0.30m;

Reference Drawings

Drwg. No.	Title

Revisions

	Name	Date	Notes

巴基斯坦默蒂亚里—拉合尔±660kV直流输电工程

±660kV HVDC Project from Matiari to Lahore in Pakistan

NATIONAL TRANSMISSION & DESPATCH COMPANY (NTDC) LIMITED PAKISTAN

CONTRACTOR 国家电网 STATE GRID 中国电力技术装备有限公司 CHINA ELECTRIC POWER EQUIPMENT AND TECHNOLOGY CO.,LTD.

SUBCONTRACTOR East China Electric Power Design Institute Co.,Ltd.

拉合尔±660kV换流站

±660kV Lahore Converter Station

设计阶段 PHASE：施工图 Detail Design

M L H V D C - L C S - E C I - D D - S G - 0 3 0 2 - 0 0 1

	姓名 Name	日期 Date
设计 Designed	沈十有	
校核 Checked		
审核 Reviewed		
批准 Approved		

雨水泵站系统图

Rain pump station system diagram

比例 Scale	图号 DWG NO.	版本 REV.
–	30-B003701S-S0302-001	A

A2(594x420)

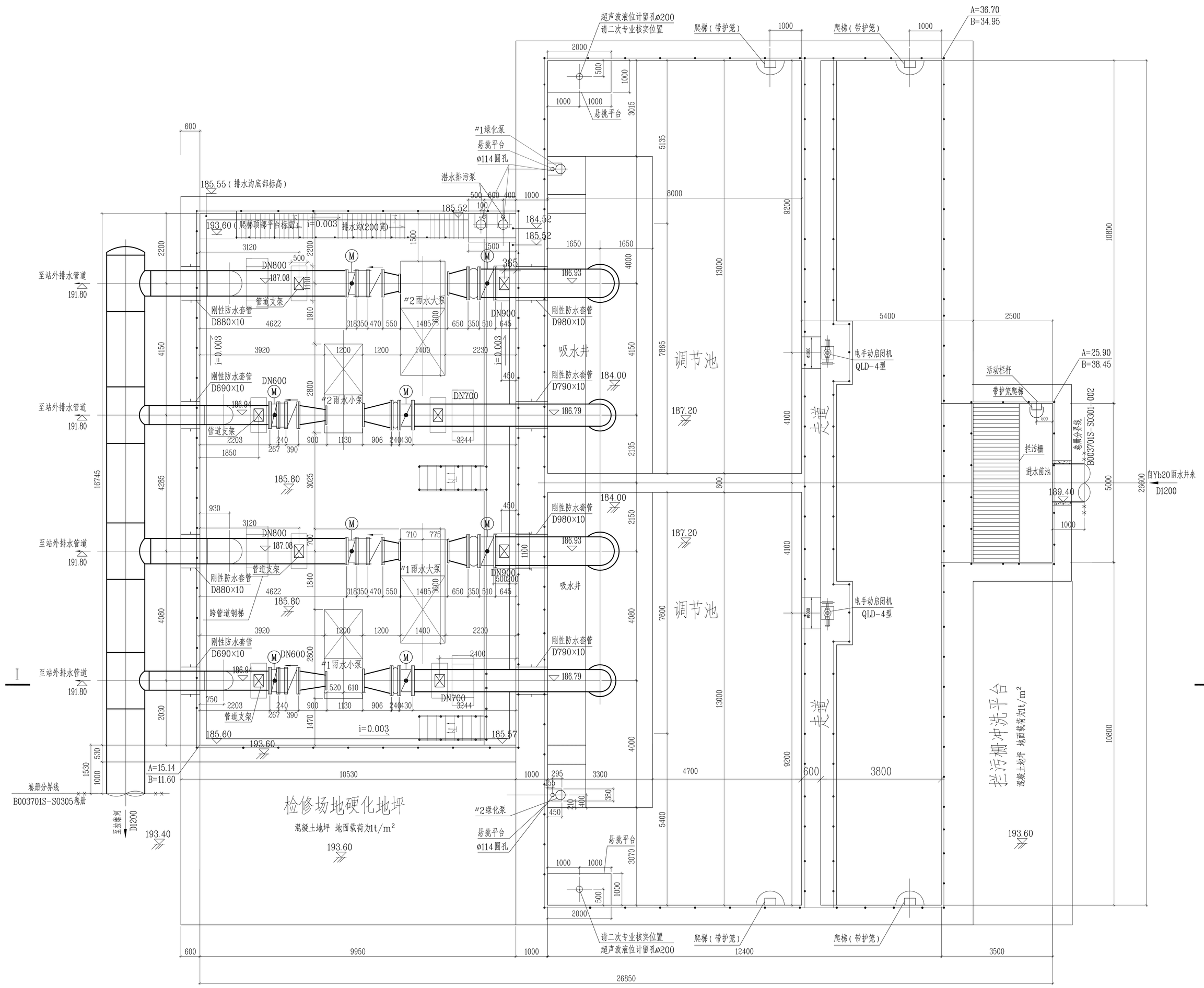

说明:

1. 本图地图标高系统采用2008高程系统，单位以m计，站区场地平均标高为193.40m，站内建筑及附属生产场标高为193.60m。
2. 本图图面标系统采用站区坐标系统，单位以m计；站区坐标系统与巴基斯坦UTM-43N平面坐标系的换算公式详见土建相关卷册。
3. 本图内道路、建筑物、构筑物相对位置仅为示意，以土建相关卷册为准。
4. 雨水泵站调节池入口雨水管道均采用钢筋混凝土拍桩管，管径以D表示，所注标高为管内底标高。泵坑内雨水管采用钢管，管径以DN表示，所注标高为管中心标高。
5. 雨水泵站内设2台KQSN600-M20S/425型雨水大泵，2台KQSN400-M17S/385型雨水小泵，其安装详图及参数详见本卷册图S0302-004、005。
6. 站外排水管道详见本工程S0305卷册。
7. 雨水泵(共4台)与水位连锁要求详见本卷册001图。
8. 拦污栅的安装详见本卷册图S0302-006。
9. 铸铁闸门及启闭机的安装详见本卷册图S0302-007。
10. 雨水泵站设备的起吊及安装均采用汽车吊。
11. 雨水泵站的移动式排水采用移动式排水泵排水。
12. 图中给构筑物尺寸详见结构专业图纸。
13. 钢管防腐及焊接要求参见本工程图S0403-01。
14. 蝶阀选址待条件确定后深挖。

Notes:

1. EGM2008 elevation is adopted in this volume,unit of elevation is m.Average elevation of outdoor ground is 193.40m,and that of road and converter transformer square is 193.60m.
2. The station coordinate(AB) is adopted in this volume,unit of coordinate is m;station coordinate(AB) and UTM-43N system conversion formula refers to Civil Engineering volume.
3. Relative location of roads, buildings and structures in the drawing is only for schematic drawing,details refer to Civil Engineering volume.
4. Rainwater pumping station adjustment tank inlet rainwater pipeline adopts reinforced concrete grade II pipe, the pipe diameter is represented by D, and the marked elevation is the inner bottom elevation of the pipe. The rainwater pipe in the pump pit is made of steel pipe, the pipe diameter is represented by DN, and the marked elevation is the pipe center elevation.
5. There are 2 KQSN600-M20S/425 Large flow Rain pumps and 2 KQSN400-M17S/385 Small flow Rain pumps in the rainwater pump station.
6. The drainage pipe outside the station is detailed in the S0305 volume of this project.
7. The rainwater pump (four units in total) and the water level interlocking requirements are detailed in Figure 001 of this volume.
8. For the installation of the trash rack, see Figure S0302-006 in this volume.
9. For the installation of cast iron gate and hoist, please refer to Figure S0302-007 in this volume.
10. The lifting and installation of the rainwater pumping station equipment are all carried out by car cranes.
11. When the rainwater pumping station is overhauled, a mobile drainage pump is provided for drainage.
12. See the structural drawings for details of the structural dimensions in the figure.
13. For steel pipe anti-corrosion and welding requirements, refer to Figure S0403-01 of this project.
14. The basis of the butterfly valve will be provided after the information is determined.

Reference Drawings

Drwg. No.	Title

Revisions

Name	Date	Notes

巴基斯坦默蒂至里一拉合尔±660kV直流输电工程
±660kV HVDC Project from Matiari to Lahore in Pakistan

CONTRACTOR 国家电网 STATE GRID 中国电力技术装备有限公司

NATIONAL TRANSMISSION & DESPATCH COMPANY (NTDC) LIMITED PAKISTAN

SUBCONTRACTOR East China Electric Power Design Institute Co.,Ltd.

拉合尔±660kV换流站
±660kV Lahore Converter Station

设计阶段 PHASE: 施工图 Detail Design

M L H V D C - L C S - E C I - D D - S G - 0 3 0 2 - 0 0 2 A

	姓名 Name	日期 Date
设计 Designed	沈计有	
校核 Checked		
审核 Reviewed		
批准 Approved		

雨水泵站平面布置图
Rain pump station layout plan

比例 Scale: 1:50 | 图号 DWG NO.: 30-B003701S-S0302-002 | 版本 REV.: A

841X1189

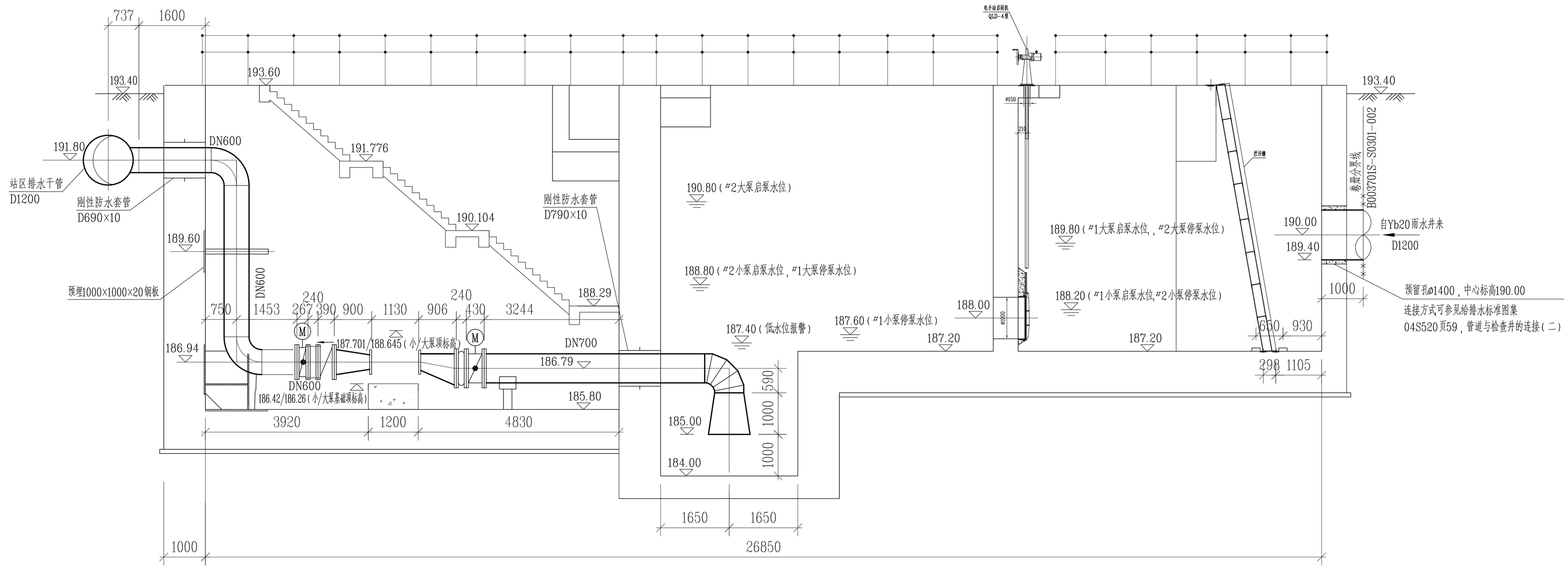

I–I剖面图

说明：

1、本图卷扬标高采用EGM2008高程系统，单位以m计。站区场地平均标高为193.40m，站内道路及换流变广场标高为193.60m。

Notes:

1、EGM2008 elevation is adopted in this volume,unit of elevation is m.Average elevation of outdoor ground is 193.40m,and that of road and converter transformer square is 193.60m.

Reference Drawings

Drwg. No.	Title

Revisions

	Name	Date	Notes

巴基斯坦默蒂亚里—拉合尔±660kV直流输电工程

±660kV HVDC Project from Matiari to Lahore in Pakistan

NATIONAL TRANSMISSION & DESPATCH COMPANY (NTDC) LIMITED PAKISTAN

CONTRACTOR 国家电网 STATE GRID 中国电力技术装备有限公司 CHINA ELECTRIC POWER EQUIPMENT AND TECHNOLOGY CO.,LTD.

SUBCONTRACTOR East China Electric Power Design Institute Co.,Ltd.

拉合尔±660kV换流站

±660kV Lahore Converter Station

设计阶段 PHASE：施工图 Detail Design

M L H V D C - L C S - E C I - D D - S G - 0 3 0 2 - 0 0 3 A

	姓名 Name	日期 Date
设计 Designed	张十青	
校核 Checked		
审核 Reviewed		
批准 Approved		
比例 Scale	1:50	图号 DWG NO. 30-B003701S-S0302-003

雨水泵站剖面布置图

Rain pump station section layout

版本 REV. A

A1(841x594)

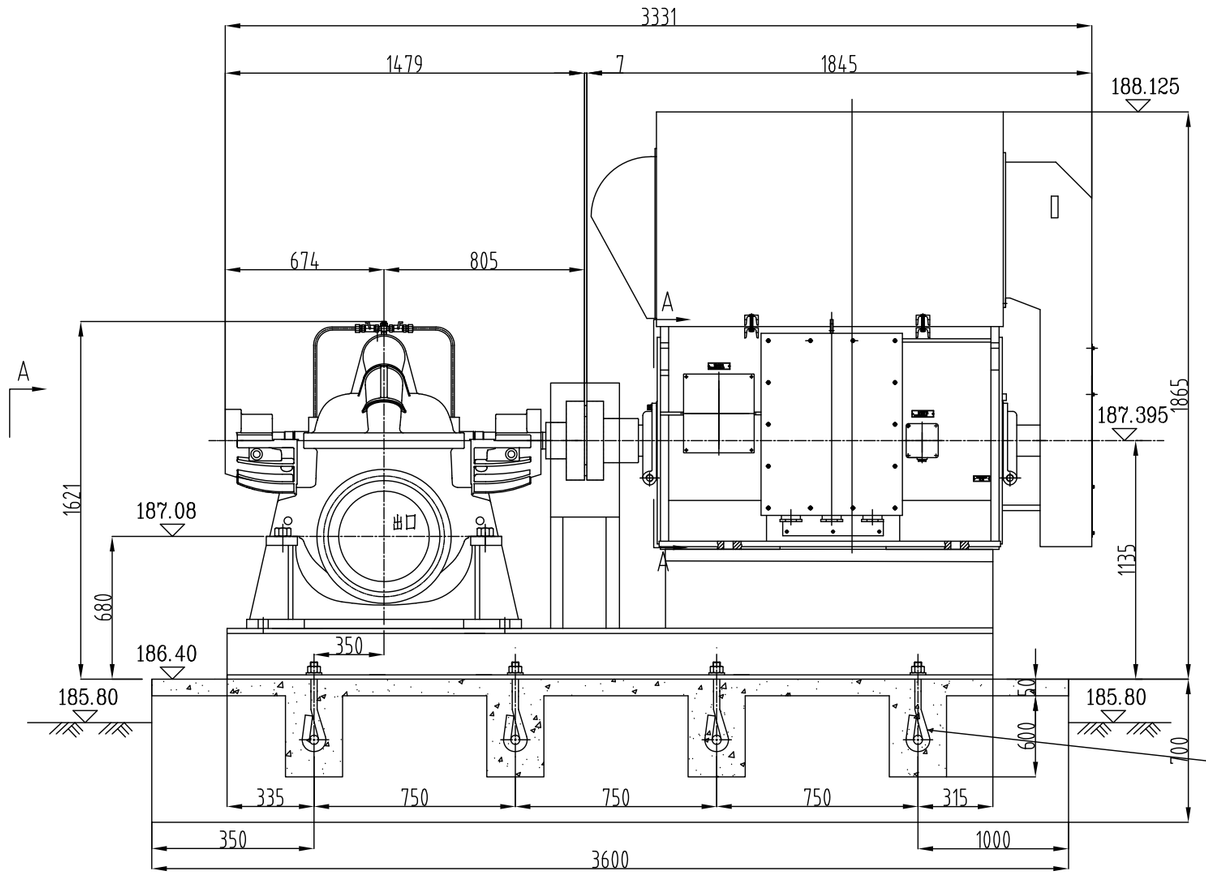

雨水大泵立面图

Large Rain pump elevation

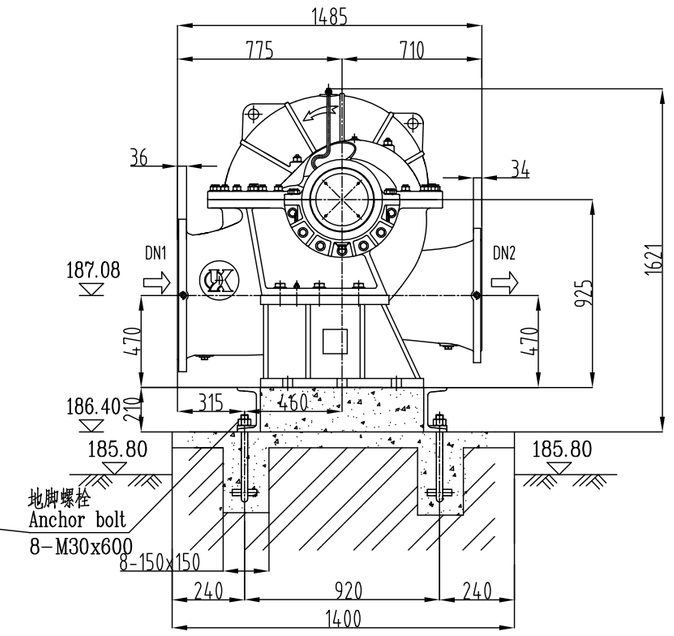

A视图

AView

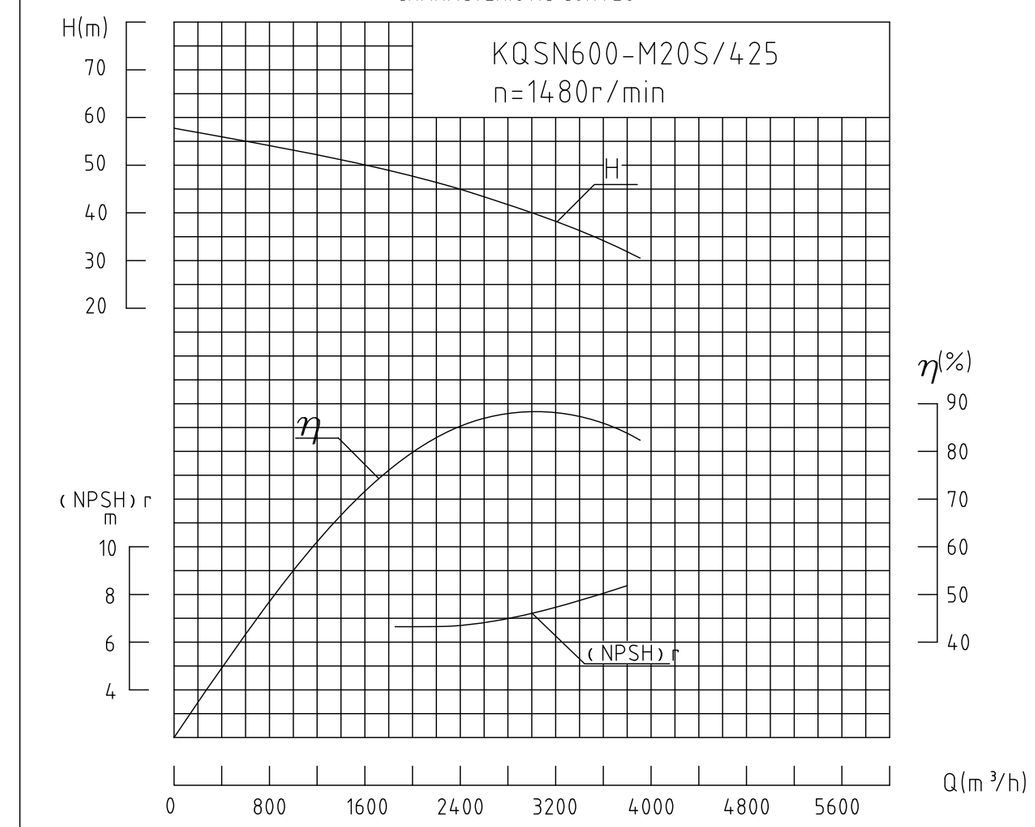

性能参数表

CHARACTERISTIC PARAMETERS

型 号 Type	汽蚀余量 NPSHr (m)	流量 Q (m3/h)	扬程 H (m)	转速 n (r/min)	配用功率 Pg (kW)	效率 η (%)
KQSN600-M20S/425	7.2	3060	40	1480	450	87

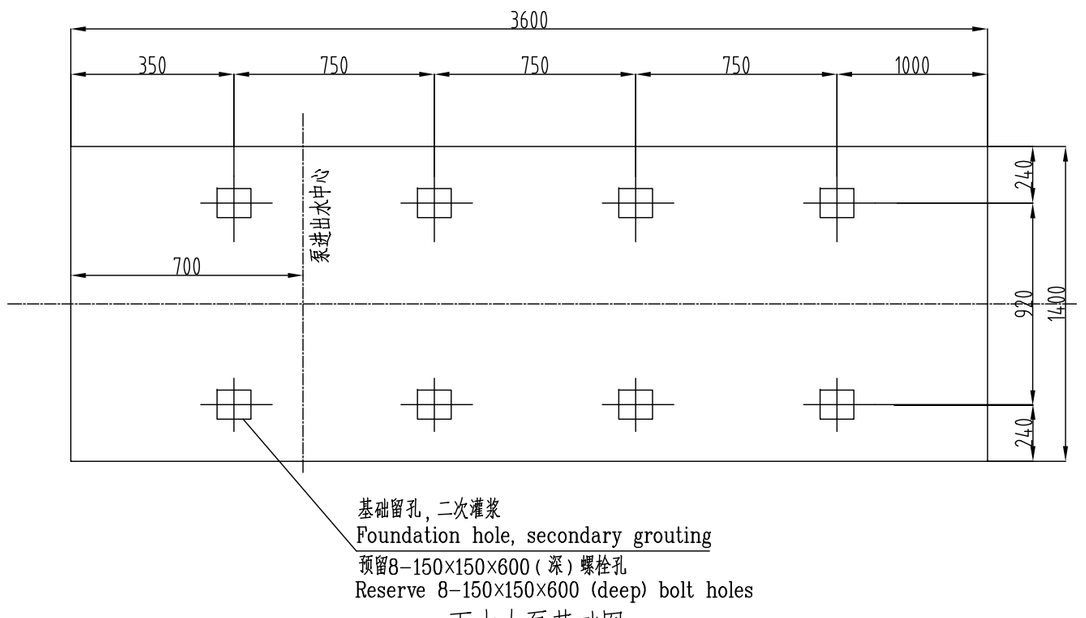

雨水大泵基础图

Large Rain pump foundation diagram

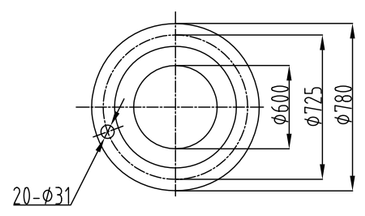

吸入法兰DN1

Suction flange DN1

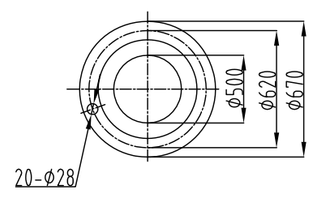

吐出法兰DN2

Spit flange DN2

泵头重量：2061kg、电机重量：3239kg、底座800kg、总重量：5980kg。

动载荷：81.5KN、静载荷：67.9KN。

地脚螺栓：M30×600　8根　　配套反法兰GB9119（系列I）

说明:

1. 本图尺寸均以mm计，标高以m计；标高采用EGM2008高程系统。
2. 两台大泵转动方向相同。从电机端看泵、水泵顺时针旋转。
3. 本图按照上海凯泉泵业(集团)有限公司提供的资料绘制（合同已订）。
4. 水泵布置详见S0302-002图。

Notes:

1. The dimensions of this figure are in mm, the elevation is in m; the elevation is EGM2008 elevation system.
2. The two large pumps rotate in the same direction. See the pump and the pump rotate clockwise from the motor end.
3. This picture is drawn according to the information provided by Shanghai Kaiquan Pump Industry (Group) Co., Ltd. (contract has been ordered).
4. See Figure S0302-002 for detailed pump layout.

Reference Drawings

Drwg. No.	Title

Revisions

	Name	Date	Notes

巴基斯坦默蒂亚里—拉合尔±660kV直流输电工程

±660kV HVDC Project from Matiari to Lahore in Pakistan

NATIONAL TRANSMISSION & DESPATCH COMPANY (NTDC) LIMITED PAKISTAN

CONTRACTOR 国家电网 STATE GRID 中国电力技术装备有限公司 CHINA ELECTRIC POWER EQUIPMENT AND TECHNOLOGY CO.,LTD.

SUBCONTRACTOR East China Electric Power Design Institute Co.,Ltd.

拉合尔±660kV换流站

±660kV Lahore Converter Station

设计阶段 PHASE：施工图 Detail Design

M L H V D C - L C S - E C I - D D - S G - 0 3 0 2 - 0 0 4 A

	姓名 Name	日期 Date
设计 Designed	陆叶青	
校核 Checked		
审核 Reviewed		
批准 Approved		
比例 Scale	-	图号 DWG NO.

雨水大泵外形安装图

Large flow Rain pump shape & installation diagram

30-B003701S-S0302-004

版本 REV. A

420X594

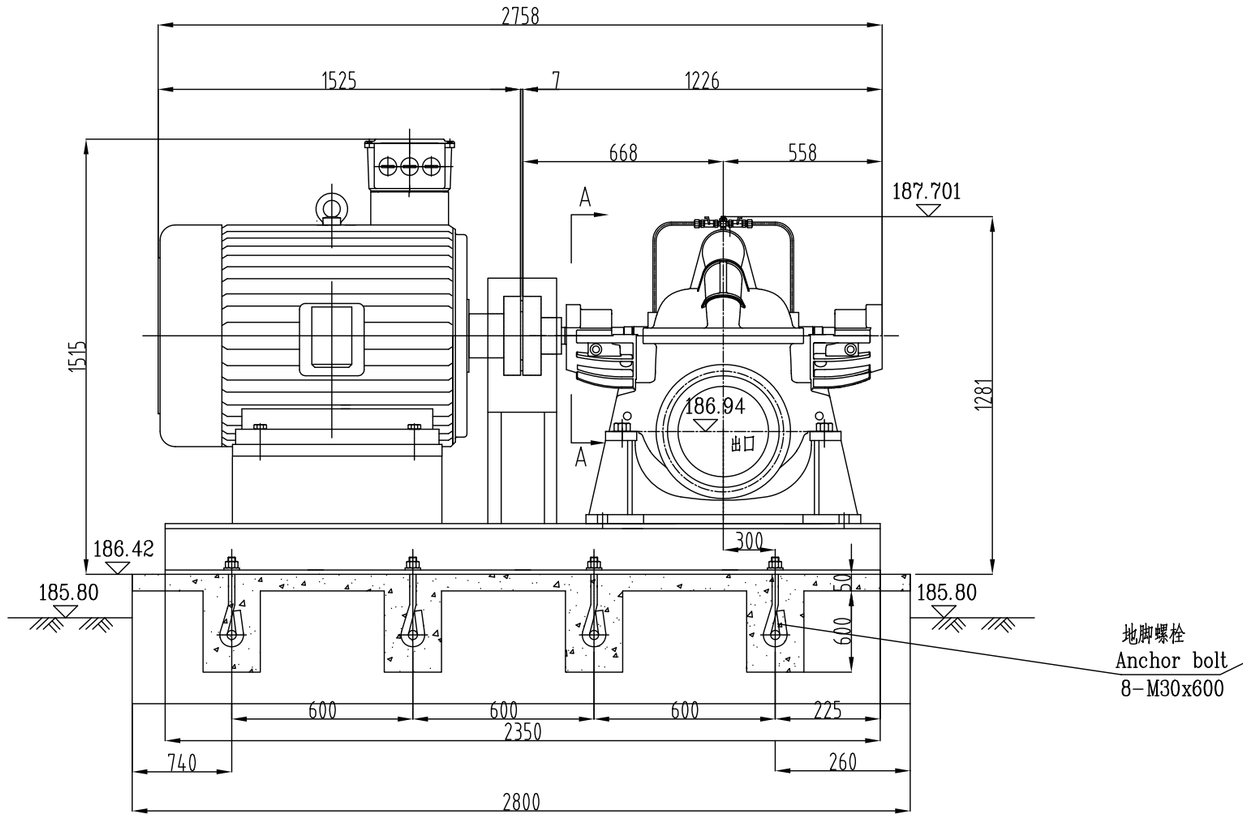

雨水小泵立面图

Small Rain pump elevation

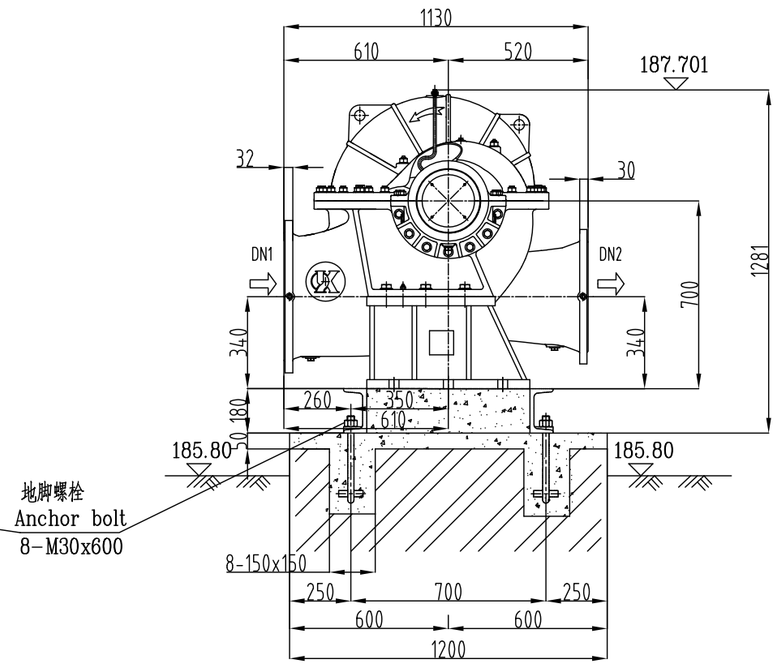

A-A视图

A-A view

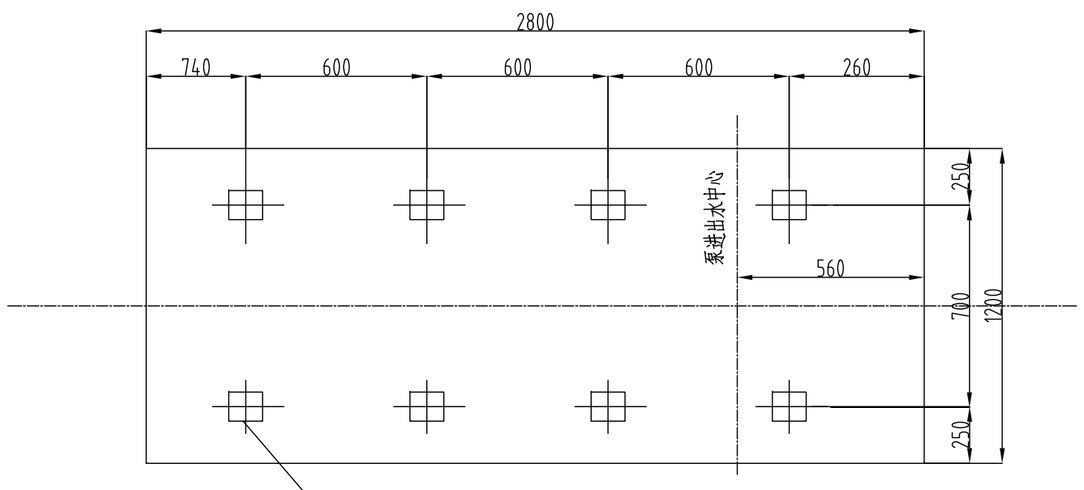

基础留孔，二次灌浆

Foundation hole, secondary grouting

预留8-150×150×600（深）螺栓孔

Reserve 8-150×150×600 (deep) bolt holes

雨水小泵基础图

Small Rain pump foundation diagram

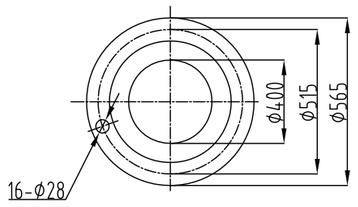

吸入法兰DN1

Suction flange DN1

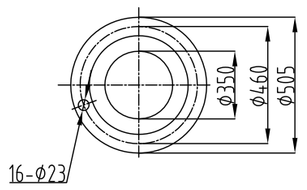

吐出法兰DN2

Spit flange DN2

泵头重量：1153kg、电机重量：1670kg、底座重量：600kg、总重量：3423kg。

动载荷：40.25KN、静载荷：33.54KN。

地脚螺栓：M30×600 8个 配套反法兰GB9119（系列）

说明:

1.本图尺寸均以mm计，标高以m计;标高采用EGM2008高程系统。

2.两台小泵转动方向相同。从电机端看泵、水泵逆时针旋转。

3.本图按照上海凯泉泵业(集团)有限公司提供的资料绘制（合同已订）。

4.水泵布置详见S0302-002图。

Notes:

1. The dimensions of this figure are in mm, the elevation is in m; the elevation is EGM2008 elevation system.
2. The two small pumps rotate in the same direction. See the pump and the pump rotate counterclockwise from the motor end.
3. This picture is drawn according to the information provided by Shanghai Kaiquan Pump Industry (Group) Co., Ltd. (contract has been ordered).
4. See Figure S0302-002 for detailed pump layout.

性能曲线图

CHARACTERISTIC CURVES

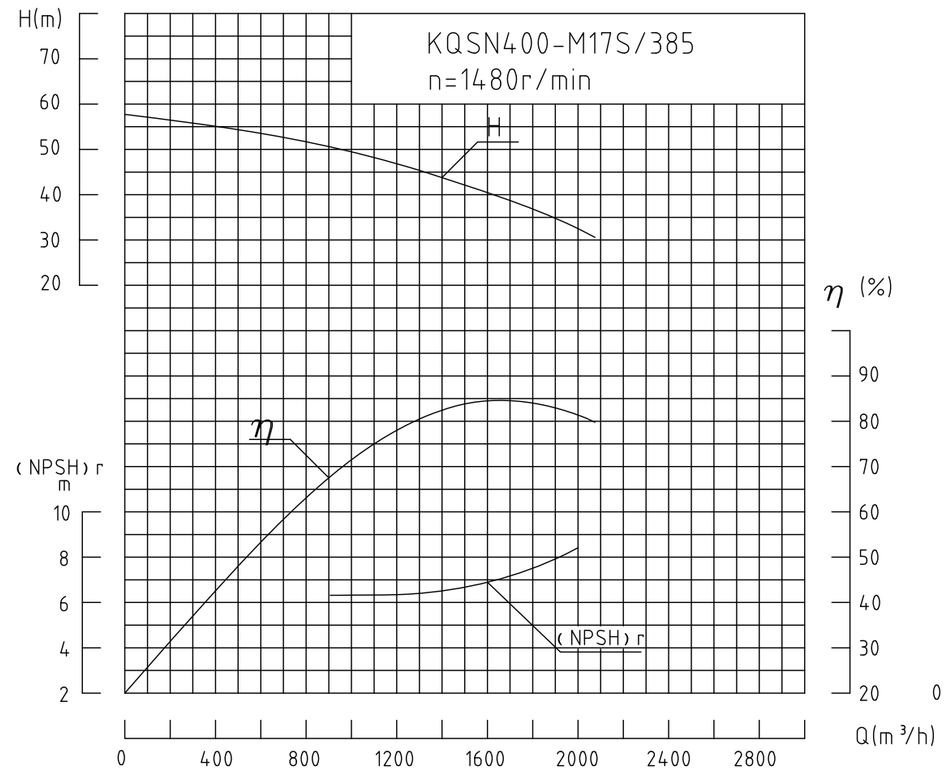

性能参数表

CHARACTERISTIC PARAMETERS

型 号 Type	汽蚀余量 NPSHr (m)	流量 Q (m3/h)	扬程 H (m)	转速 n (r/min)	配用功率 Pg (kW)	效率 η (%)
KQSN400-M17S/385	6	1620	40	1480	250	86

Reference Drawings

Drwg. No.	Title

Revisions

	Name	Date	Notes

巴基斯坦默蒂亚里—拉合尔±660kV直流输电工程

±660kV HVDC Project from Matiari to Lahore in Pakistan

NATIONAL TRANSMISSION & DESPATCH COMPANY (NTDC) LIMITED PAKISTAN

CONTRACTOR 国家电网 STATE GRID 中国电力技术装备有限公司 CHINA ELECTRIC POWER EQUIPMENT AND TECHNOLOGY CO.,LTD.

SUBCONTRACTOR East China Electric Power Design Institute Co.,Ltd.

拉合尔±660kV换流站

±660kV Lahore Converter Station

设计阶段 PHASE: 施工图 Detail Design

M L H V D C - L C S - E C I - D D - S G - 0 3 0 2 - 0 0 5 A

	姓名 Name	日期 Date
设计 Designed	陆叶青	
校核 Checked		
审核 Reviewed		
批准 Approved		
比例 Scale	-	图号 DWG NO.

雨水小泵外形安装图

Small flow Rain pump shape & installation diagram

30-B003701S-S0302-005

版本 REV. A

420X594

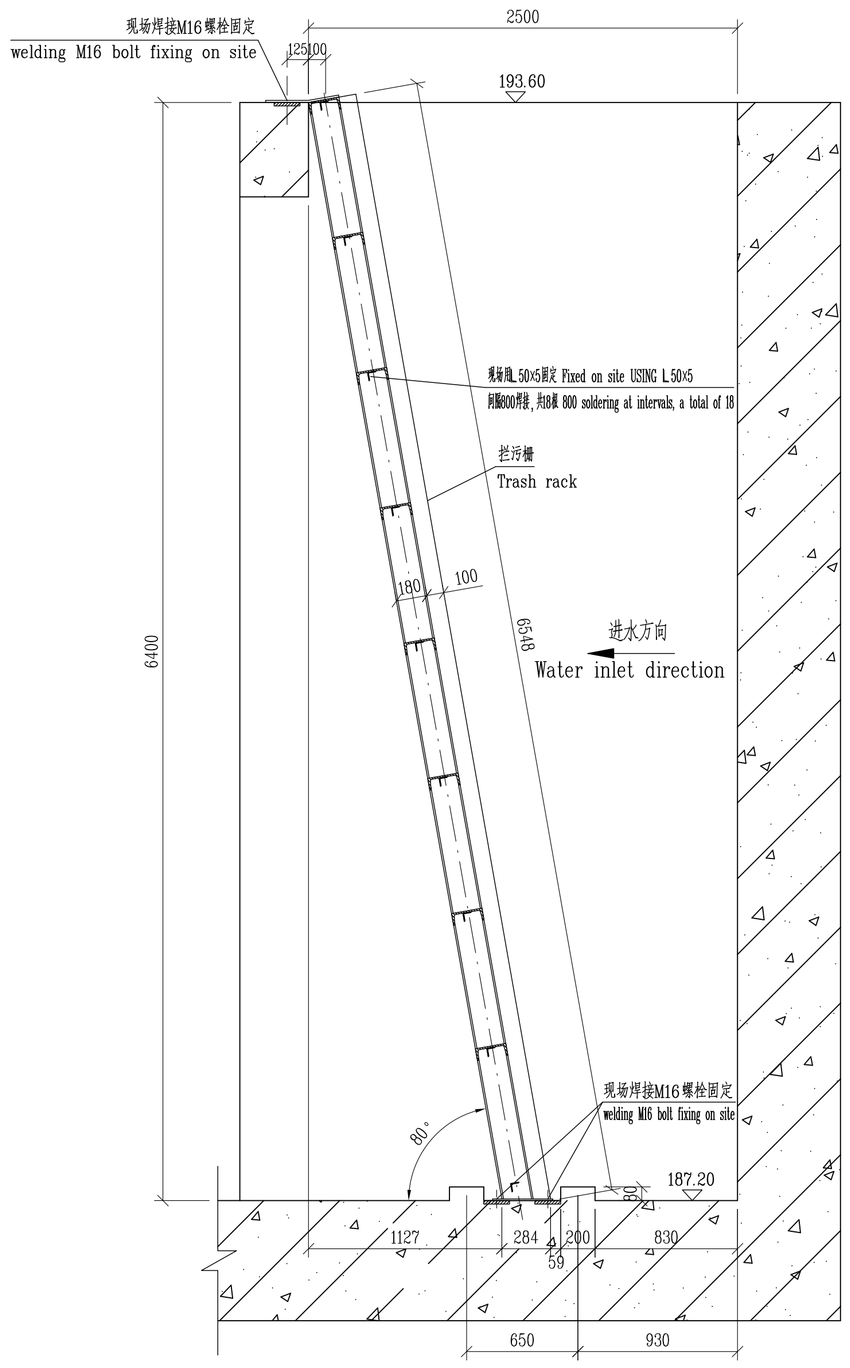

雨水泵站拦污栅安装图

Rain pump station trash rack installation diagram

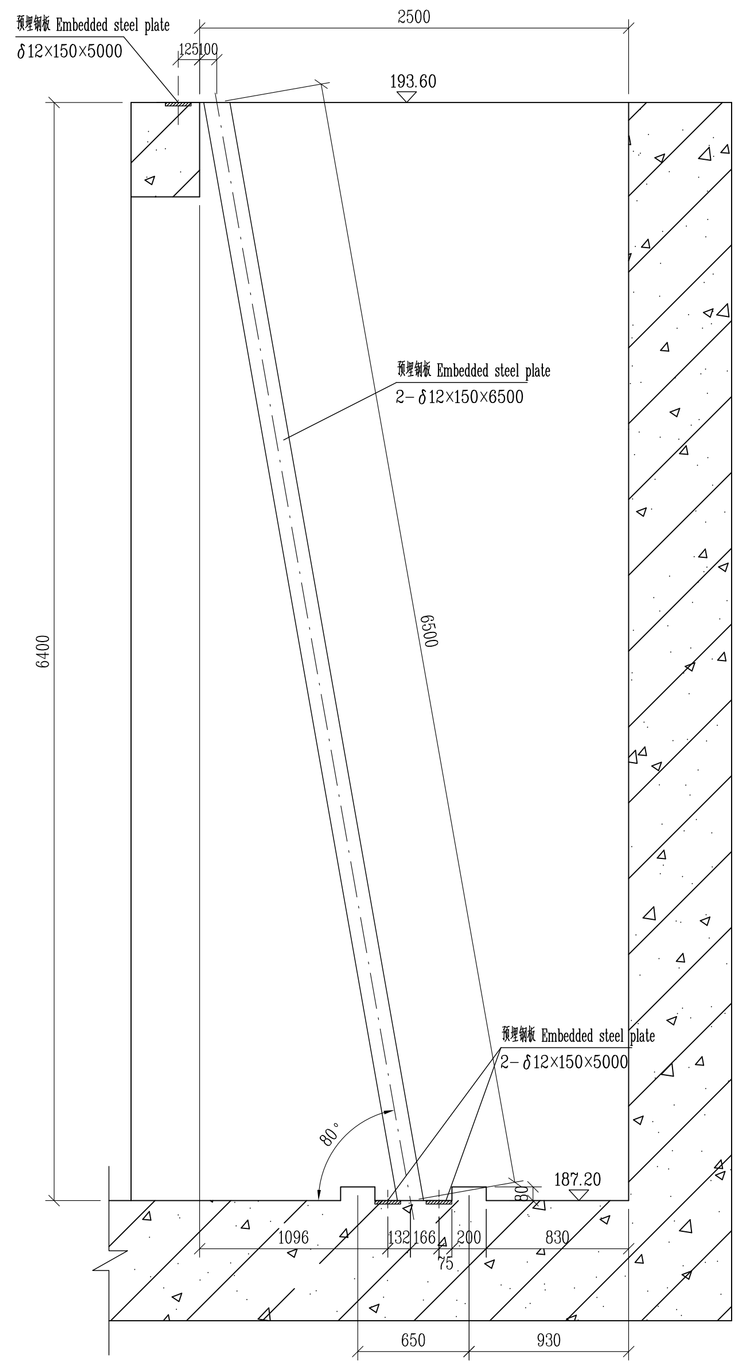

雨水泵站拦污栅埋件图

Rainwater pump station trash rack embedded diagram

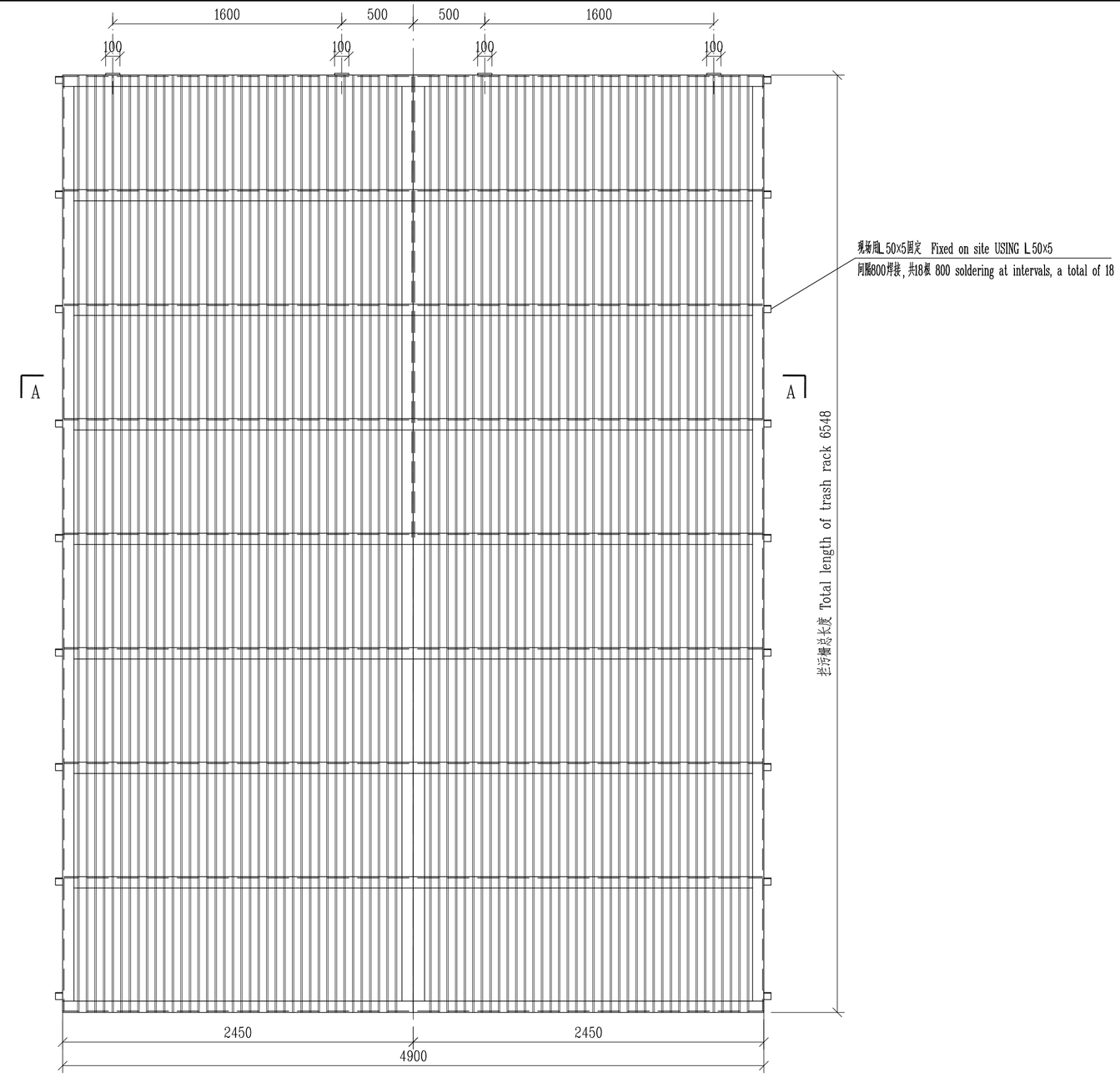

雨水泵站拦污栅外形图

Rain pump station trash rack outline drawing

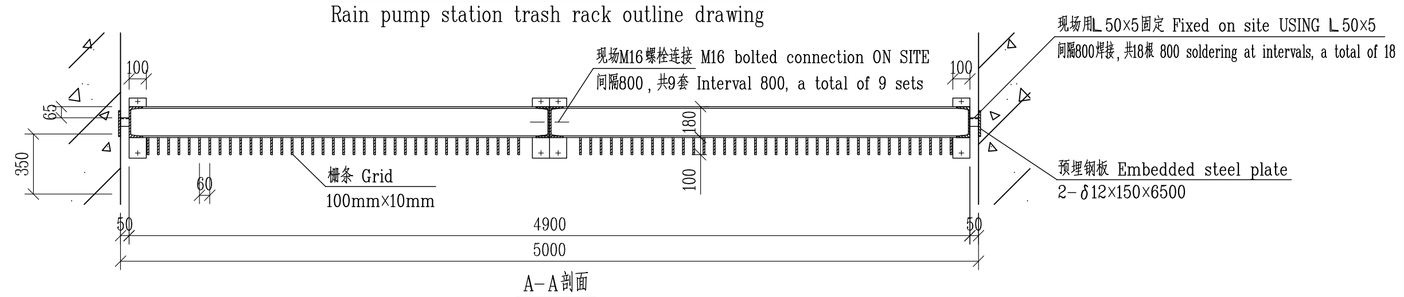

A-A剖面

说明:

1. 本图标高单位以m计，尺寸单位以mm计。
2. 拦污栅前后报警水位差300mm，设计水位差1500mm，校核水位差2000mm。
3. 防腐要求详见设备技术协议。

Notes:

1. The unit of elevation is in m and the unit of measure is in mm.
2. The alarm water level difference is 300mm before and after the trash rack, the design water level difference is 1500mm, and the check water level difference is 2000mm.
3. Anti-corrosion requirements are detailed in the equipment technical agreement.

Reference Drawings

Drwg. No.	Title

Revisions

Name	Date	Notes

巴基斯坦默蒂亚里—拉合尔±660kV直流输电工程

±660kV HVDC Project from Matiari to Lahore in Pakistan

NATIONAL TRANSMISSION & DESPATCH COMPANY (NTDC) LIMITED PAKISTAN

CONTRACTOR 国家电网 STATE GRID 中国电力技术装备有限公司 CHINA ELECTRIC EQUIPMENT AND TECHNOLOGY CO.,LTD.

SUBCONTRACTOR East China Electric Power Design Institute Co.,Ltd.

拉合尔±660kV换流站

±660kV Lahore Converter Station

设计阶段 PHASE: 施工图 Detail Design

M L H V D C - L C S - E C I - D D - S G - 0 3 0 2 - 0 0 6 A

	姓名 Name	日期 Date
设计 Designed	设计者	
校核 Checked		
审核 Reviewed		
批准 Approved		
比例 Scale		图号 DWG NO.

雨水泵站拦污栅安装图

Rain pump station trash rack installation diagram

30-B003701S-S0302-006

版本 REV. A

A1(841x594)

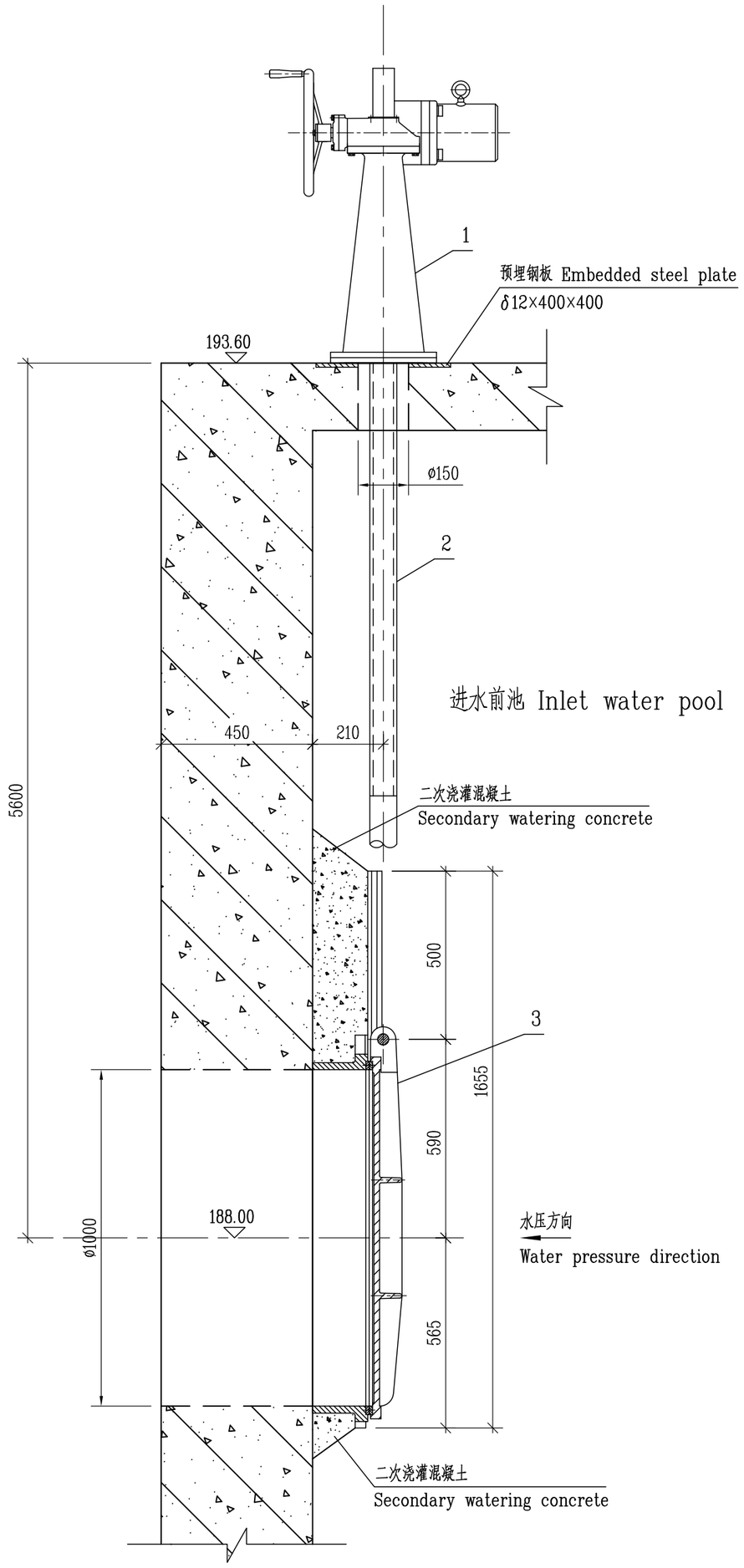

闸门及启闭机安装图

Gate and hoist installation diagram

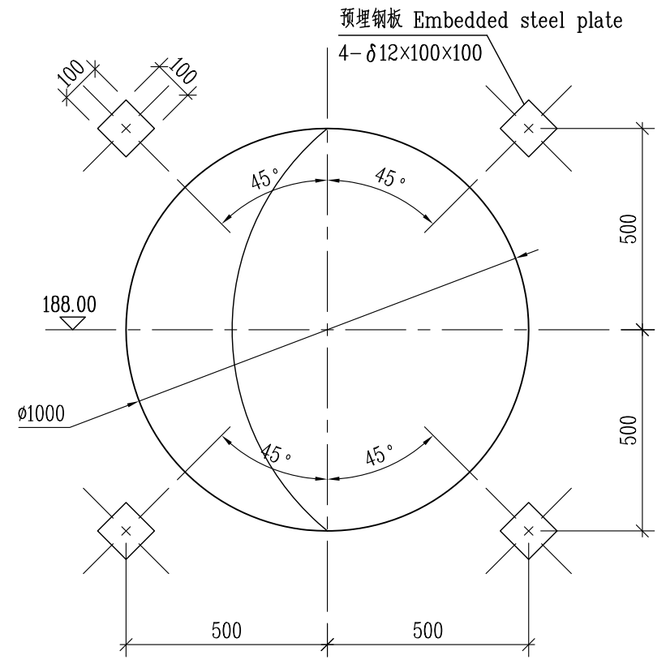

池壁预埋钢板详图

Pool wall embedded steel plate detail

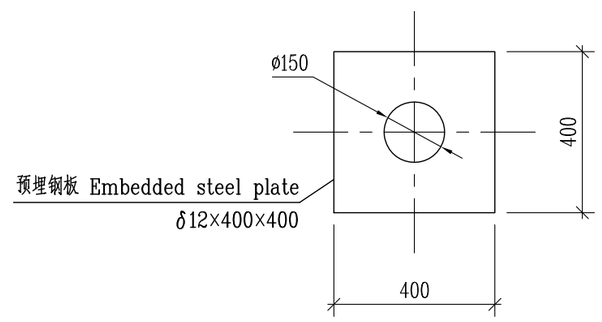

启闭机底座预埋钢板详图

Hoist base pre-embedded steel plate detail

闸门特性表 Gate characteristics table			
序号NO.	名称 Name	单位 Unit	设计参数 Design Parameters
1	数量 Quantity	套	1
2	规格型号Specification model		SYM-1000
3	闸门型式 Gate type		附壁式Wall type
4	孔口尺寸Orifice size	mm	φ1000
5	止水方式 Water stop method		正向铜条止水Forward copper bars
6	正向渗水量Positive water seepage	L/m.min	≤0.72
7	反向渗水量Reverse water seepage	L/m.min	≤0.72
8	闸框及闸板材质Brake frame and gate material		HT200
9	中心标高Center elevation	m	188.00
10	最高设计水位Highest design water level	m	10
11	启闭机型号Hoist model		QLD-4
12	启闭形式Opening and closing form		手电两用 Flashlight dual purpose
13	启闭力Opening and closing force	t	4
14	手摇力Hand force	N	≤150
15	主功率Main power	kW	0.75
16	设备总重量Total weight of equipment	kg	850

序号NO.	代号 Code	名称 Name	数量 Num	材料 Material	重量Weight(kg)	备注 Remarks
3	SYM-1000-2	铸铁圆闸门 Cast iron round gate	1	铸铁嵌铜Cast iron inlaid copper	670	
2	SYM-1000-1	丝杆 Screw	1	2Cr13	40	
1	QLD-4	电手动启闭机 Electric manual hoist	1	组合件 Assembly	140	

Reference Drawings

Drwg. No.	Title

Revisions

Name	Date	Notes

说明:

1. 本图标高系统采用EGM2008高程系统，标高单位以m计，尺寸单位以mm计。
2. 闸门安装位置详见图本卷册002图。
3. 本图参照相似工程资料绘制，组装前要对所有的零部件进行严格的检验，合格后方可进行装配。
4. 预埋钢板埋设应平直、位置准确，其平面度误差应小于5mm，钢板埋设的水平度或垂直度误差应小于2/1000mm。
5. 闸门现场用牙条4-M20固定好后焊接，最后二次浇灌混凝土，启闭机就位后焊接。

Notes:

1. Elevation system adopts EGM2008 elevation system, the unit of elevation is in m, and the unit of measure is in mm.
2. The installation position of the gate is shown in Figure 002 of this volume.
3. This drawing is drawn with reference to similar engineering data. All components must be inspected strictly before assembly, and assembled before being qualified.
4. The embedding steel plate should be straight and accurate, and the flatness error should be less than 5mm. The horizontal or vertical error of the steel plate should be less than 2/1000mm.
5. The gate is fixed with the tooth bar 4-M20 and welded. Finally, the concrete is poured twice, and the hoist is welded in place.

巴基斯坦默蒂亚里—拉合尔±660kV直流输电工程

±660kV HVDC Project from Matiari to Lahore in Pakistan

NATIONAL TRANSMISSION & DESPATCH COMPANY (NTDC) LIMITED PAKISTAN

CONTRACTOR 国家电网 STATE GRID 中国电力技术装备有限公司 CHINA ELECTRIC POWER EQUIPMENT AND TECHNOLOGY CO.,LTD.

SUBCONTRACTOR East China Electric Power Design Institute Co.,Ltd.

拉合尔±660kV换流站

±660kV Lahore Converter Station

设计阶段 PHASE: 施工图 Detail Design

M L H V D C - L C S - E C I - D D - S G - 0 3 0 2 - 0 0 7

	姓名 Name	日期 Date
设计 Designed	段叶青	
校核 Checked		
审核 Reviewed		
批准 Approved		
比例 Scale	1:15	图号 DWG NO. 30-B003701S-S0302-007

雨水泵站闸门启闭机安装图

Rain pump station gate hoist installation diagram

版本 REV.

A2(594x420)

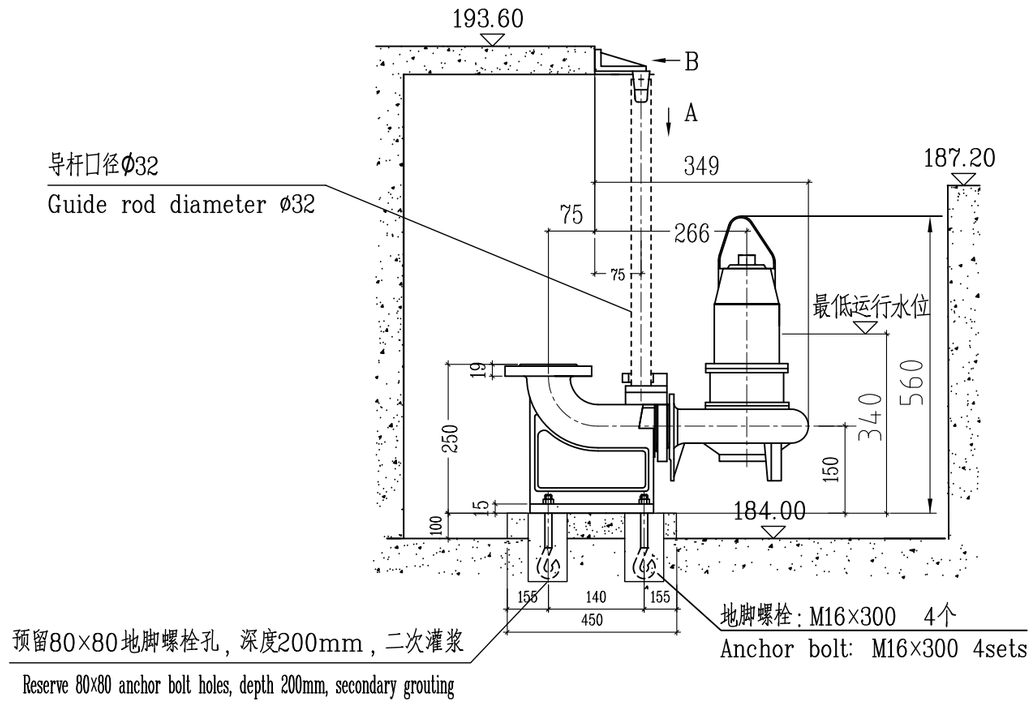

绿化泵立视图 Green water pump vertical view

自动耦合式安装Automatic coupling installation

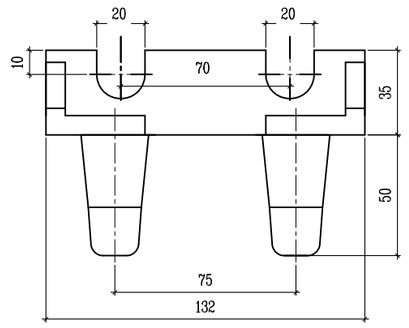

B 向

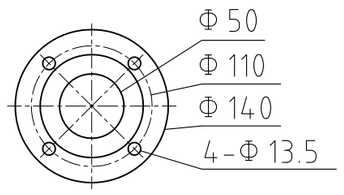

法兰尺寸 Flange size

法兰按GB/T17241.6 PN6标准 Flange according to GB/T17241.6 PN6 standard

性能曲线图

CHARACTERISTIC CURVES

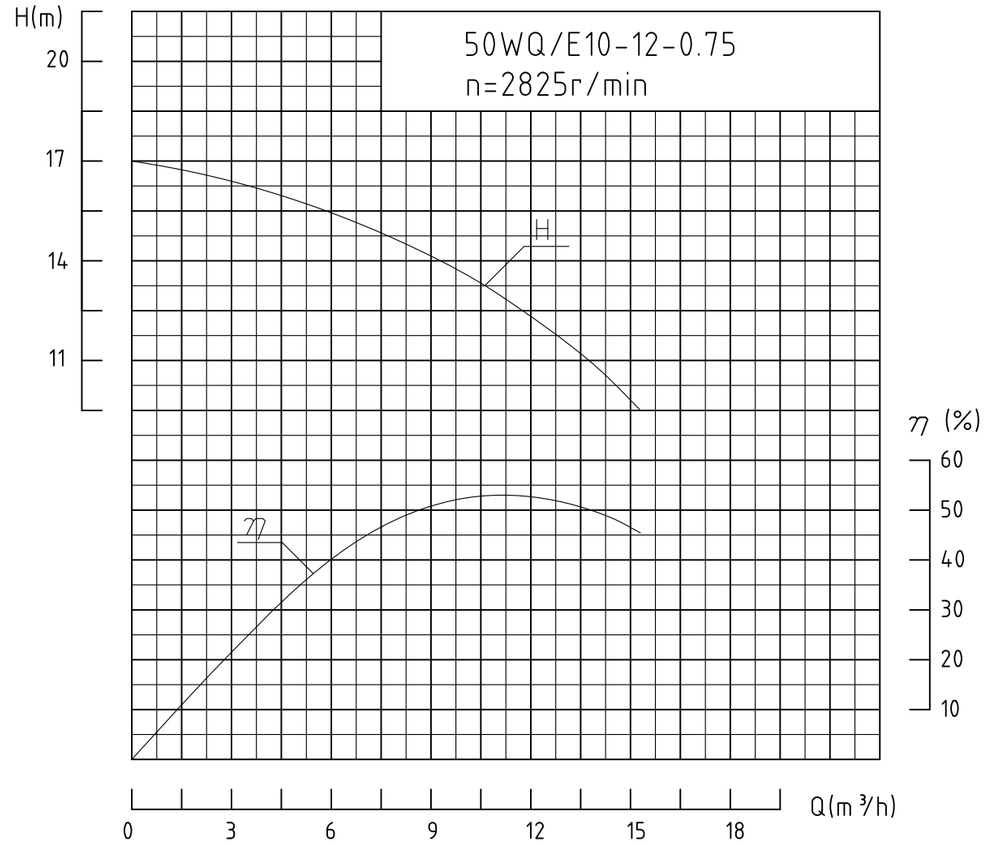

性能参数表

CHARACTERISTIC PARAMETERS

型 号 Type	汽蚀余量 NPSHr (m)	流量 Q (m3/h)	扬程 H (m)	转速 n (r/min)	配用功率 Pg (kW)	效率 η (%)
50WQ/E10-12-0.75	-	5	15	2825	0.75	35

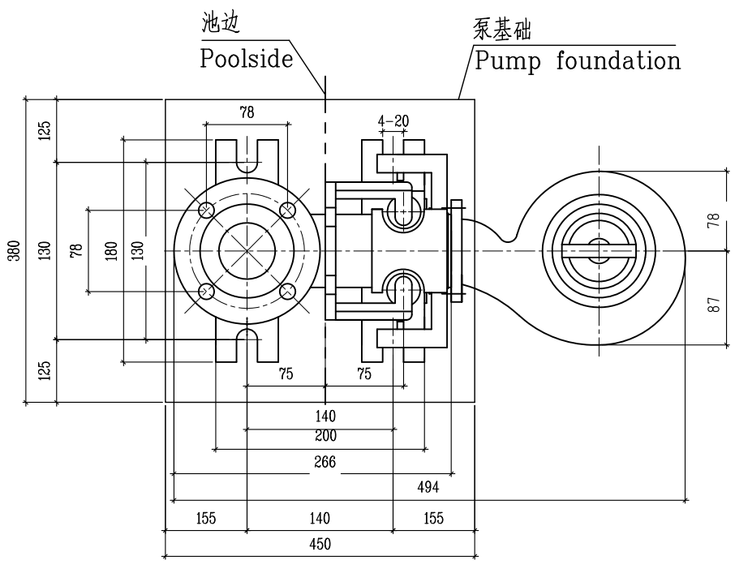

A 向

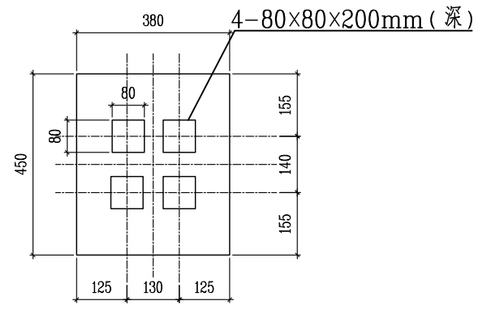

基础留孔布置图

Foundation hole layout

说明:

1.本图尺寸均以mm计，标高以m计;标高采用EGM2008高程系统。

2.本图按照上海凯泉泵业(集团)有限公司提供的资料绘制（合同已订）。

3.水泵布置详见S0302-002图。

Notes:

1. The dimensions of this figure are in mm, the elevation is in m; the elevation is EGM2008 elevation system.

2. This picture is drawn according to the information provided by Shanghai Kaiquan Pump Industry (Group) Co., Ltd. (contract has been ordered).

3. See Figure S0302-002 for detailed pump layout.

配套反法兰GB9119（系列I）

整机重量：22kg、动载荷：0.26KN、静载荷：0.22KN。

地脚螺栓：M16×300 4个

Reference Drawings

Drwg. No.	Title

Revisions

	Name	Date	Notes

巴基斯坦默蒂亚里—拉合尔±660kV直流输电工程

±660kV HVDC Project from Matiari to Lahore in Pakistan

NATIONAL TRANSMISSION & DESPATCH COMPANY (NTDC) LIMITED PAKISTAN

CONTRACTOR 国家电网 STATE GRID 中国电力技术装备有限公司 CHINA ELECTRIC POWER EQUIPMENT AND TECHNOLOGY CO.,LTD.

SUBCONTRACTOR East China Electric Power Design Institute Co.,Ltd.

拉合尔±660kV换流站

±660kV Lahore Converter Station

设计阶段 PHASE: 施工图 Detail Design

M L H V D C - L C S - E C I - D D - S G - 0 3 0 2 - 0 0 8 A

	姓名 Name	日期 Date
设计 Designed	段叶青	
校核 Checked		
审核 Reviewed		
批准 Approved		
比例 Scale	-	图号 DWG NO.

绿化水泵安装图

Green water pump installation diagram

30-B003701S-S0302-008

版本 REV. A

A2(594x420)

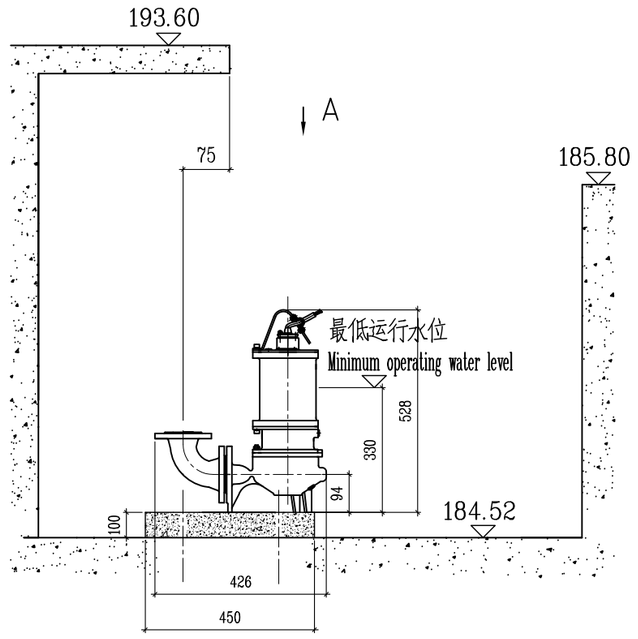

潜水泵立视图 Submersible pump vertical view

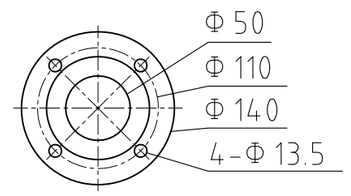

法兰尺寸 Flange size

法兰按GB/T17241.6 PN6标准 Flange according to GB/T17241.6 PN6 standard

说明:

1.本图尺寸均以mm计，标高以m计;标高采用EGM2008高程系统。

2.本图按照上海凯泉泵业(集团)有限公司提供的资料绘制(合同已订)。

3.水泵布置详见S0302-002图。

Notes:

1. The dimensions of this figure are in mm, the elevation is in m; the elevation is EGM2008 elevation system.

2. This picture is drawn according to the information provided by Shanghai Kaiquan Pump Industry (Group) Co., Ltd. (contract has been ordered).

3. See Figure S0302-002 for detailed pump layout.

性能曲线图
CHARACTERISTIC CURVES

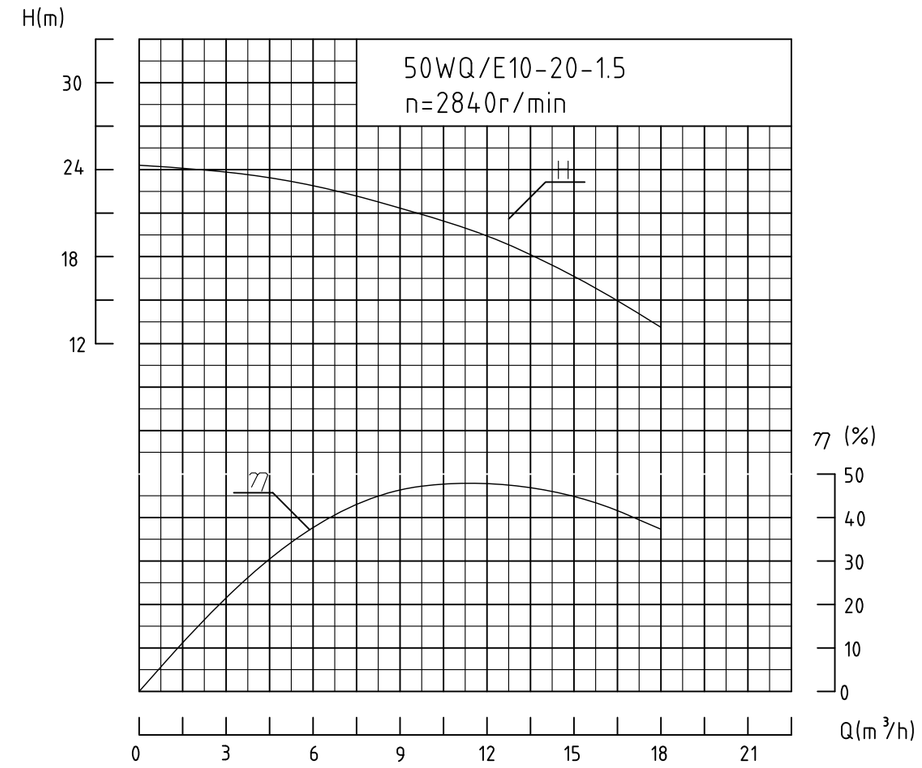

性能参数表
CHARACTERISTIC PARAMETERS

型 号 Type	汽蚀余量 NPSHr (m)	流量 Q (m3/h)	扬程 H (m)	转速 n (r/min)	配用功率 Pg (kW)	效率 η (%)
50WQ/E10-20-1.5	--	10	20	2840	1.5	47

整机重量:26kg、动载荷:0.3KN、静载荷:0.25KN。

移动硬管连接 配套反法兰GB9119(系列I)

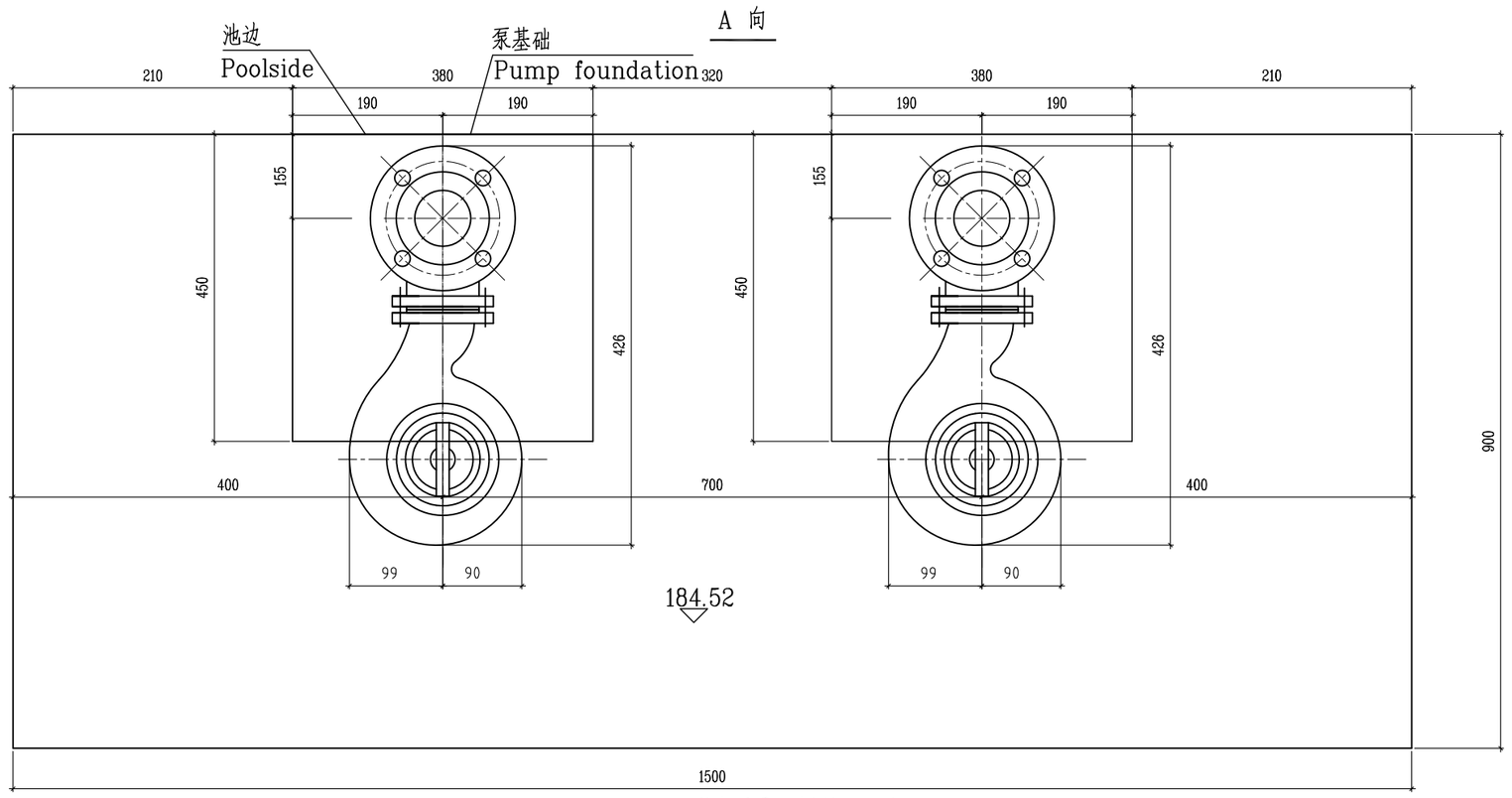

潜水泵平面布置图(A向)

Submersible pump floor plan

Reference Drawings

Drwg. No.	Title

Revisions	Name	Date	Notes

巴基斯坦默蒂亚里—拉合尔±660kV直流输电工程

±660kV HVDC Project from Matiari to Lahore in Pakistan

NATIONAL TRANSMISSION & DESPATCH COMPANY (NTDC) LIMITED PAKISTAN

CONTRACTOR 国家电网 STATE GRID 中国电力技术装备有限公司 CHINA ELECTRIC POWER EQUIPMENT AND TECHNOLOGY CO.,LTD.

SUBCONTRACTOR East China Electric Power Design Institute Co.,Ltd.

拉合尔±660kV换流站

±660kV Lahore Converter Station

设计阶段 PHASE: 施工图 Detail Design

M L H V D C - L C S - E C I - D D - S G - 0 3 0 2 - 0 0 9 A

	姓名 Name	日期 Date
设计 Designed	段叶青	
校核 Checked		
审核 Reviewed		
批准 Approved		

潜水排污泵安装图

Submersible sewage pump installation diagram

比例 Scale	图号 DWG NO.	版本 REV.
-	30-B003701S-S0302-009	A

A2(594x420)

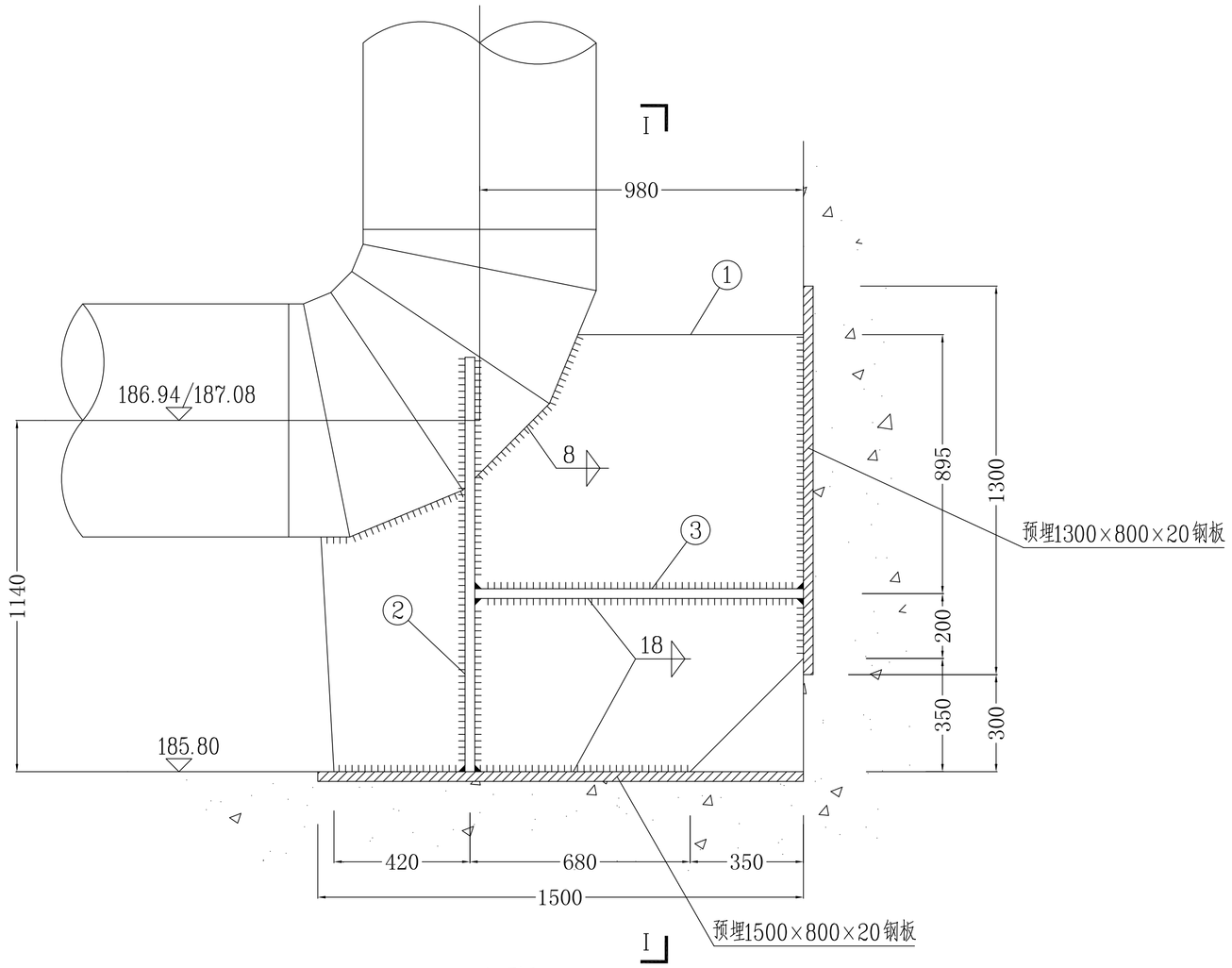

立面图
Elevation

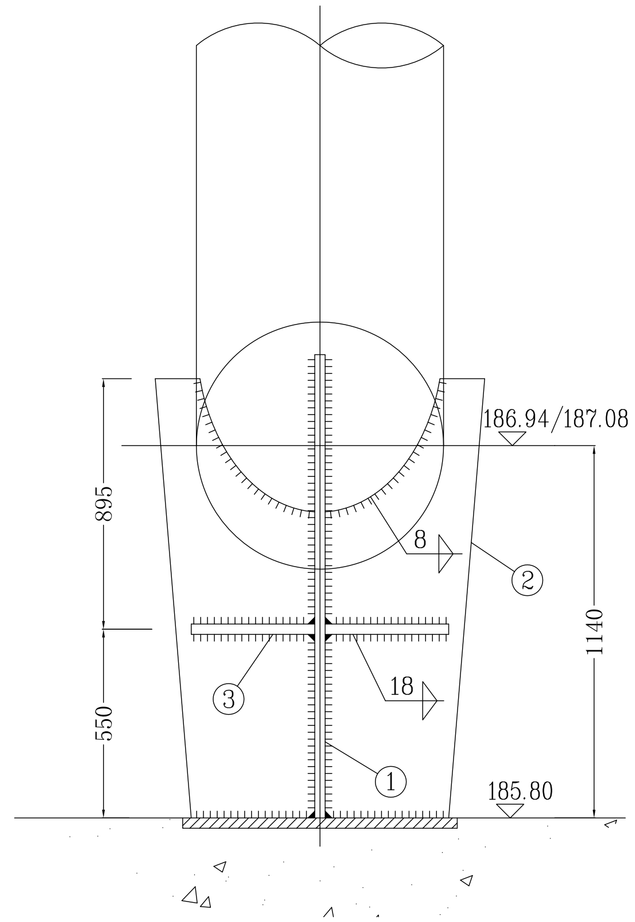

I-I剖面图
I-I profile

说明：

1、零件预先组合，焊缝采用E4303或E5015型电焊条焊接。
2、图中尺寸以毫米为单位。
3、本工程共制作弯管焊接支座4只。
4、弯管焊接支座钢构件防腐要求详见本工程图S0403-01。

Notes：

1. The parts are pre-combined, and the welds are welded by E4303 or E5015 welding rods.
2. The dimensions in the figure are in millimeters.
3. A total of 4 elbow welding supports were produced in this project.
4. The anti-corrosion requirements for the steel components of the elbow welded support are shown in Figure S0403-01 of this project.

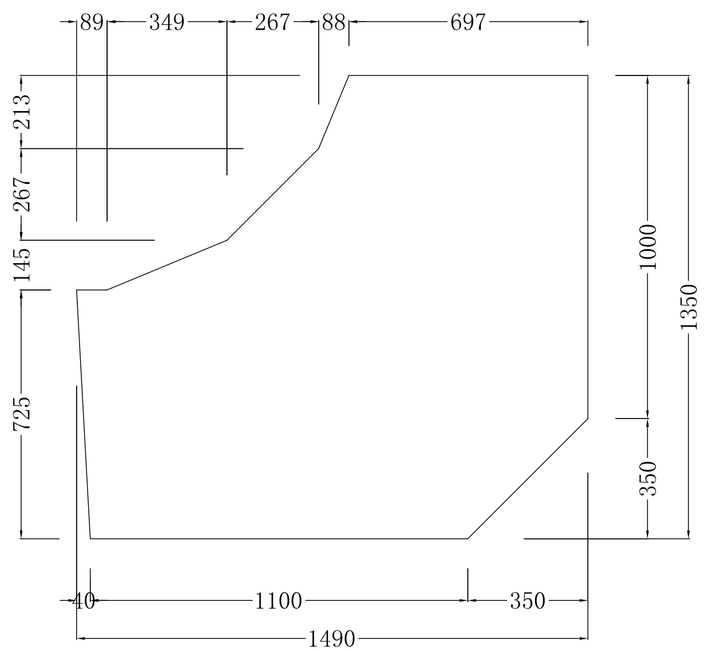

1零件详图
Part 1 detail

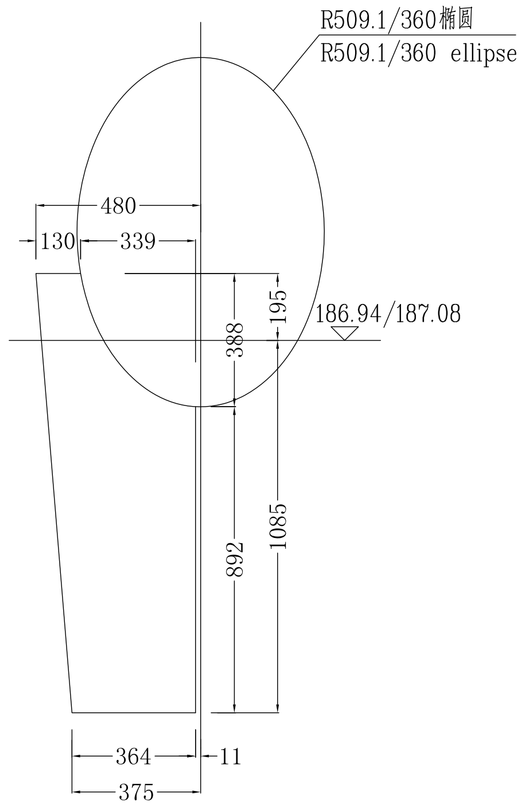

2零件详图
Part 2 detail

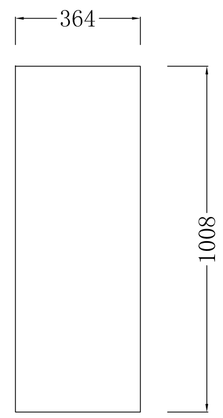

3零件详图
Part 3 detail

一只弯管焊接支座材料表　　总质量：625.8kg

编号	名称	规格	材料	单位	数量	单质量	总质量	备注
						质量(kg)		
3	肋板	□1019×364-22	Q235A	件	2	58.7	117.4	
2	肋板	□1280×469-22	Q235A	件	2	95.0	190.0	
1	立板	□1490×1350-22	Q235A	件	1	318.4	318.4	

Reference Drawings

Drwg. No.	Title

Revisions

Name	Date	Notes

巴基斯坦默蒂亚里—拉合尔±660kV直流输电工程
±660kV HVDC Project from Matiari to Lahore in Pakistan

NATIONAL TRANSMISSION & DESPATCH COMPANY (NTDC) LIMITED PAKISTAN

CONTRACTOR 国家电网 STATE GRID 中国电力技术装备有限公司 CHINA ELECTRIC EQUIPMENT TECHNOLOGY CO.,LTD.

SUBCONTRACTOR East China Electric Power Design Institute Co.,Ltd.

拉合尔±660kV换流站
±660kV Lahore Converter Station

设计阶段 PHASE：施工图 Detail Design

M L H V D C - L C S - E C I - D D - S G - 0 3 0 2 - 0 1 0 A

	姓名 Name	日期 Date
设计 Designed	设计者	
校核 Checked		
审核 Reviewed		
批准 Approved		
比例 Scale	-	图号 DWG NO. 30-B003701S-S0302-010

弯管焊接支座详图
Curved pipe welding support detail

版本 REV. A

A1(841x594)

Notes: Note: Pipe fittings (that are unexpectable or with a diameter ≤ DN50) and anti-corrosion materials are included in the length, do not list separately.
注：不可预计管件、小于等于DN50的管件以及防腐材料均计入管长，不另开列。

编号 No.	名称 Name	规格 Parameters	单位 Unit	数量	材料 Material	单重 Single (重量Weight)	总重 Total (重量Weight)	参考图号及备注 Remark
27	管帽 Tube cap	DN1200 PN=1.0MPa	Set 只	1				GB 13401-2005
26	Prestressed Concrete Piping therr-stage pipe 预应力钢筋混凝土管III阶段管	D1200，PN=0.8MPa	m 米	10	Concrete 钢筋混凝土	–	–	GB 5696-2006
25	异径三通 Reducing tee	DN1200/DN600 PN=1.0MPa	Set 只	2				
24	异径三通 Reducing tee	DN1200/DN800 PN=1.0MPa	Set 只	2				
23	双法兰传力伸缩节 Double flange force transmission expansion joint	DN600 PN=1.0MPa	Set 只	2				
22	双法兰传力伸缩节 Double flange force transmission expansion joint	DN800 PN=1.0MPa	Set 只	2				
21	微阻缓闭止回阀 Micro-resistance slow-closing check valve	DN600 PN=1.0MPa	Set 只	2	Q235a			
20	微阻缓闭止回阀 Micro-resistance slow-closing check valve	DN800 PN=1.0MPa	Set 只	2	Q235a			
19	电动蝶阀 Electric butterfly valve	DN800 PN=1.0MPa	Set 只	2	Q235a			
18	电动蝶阀 Electric butterfly valve	DN800 PN=1.0MPa	Set 只	2	Q235a			
17	电动蝶阀 Electric butterfly valve	DN700 PN=0.6MPa	Set 只	2	Q235a			
16	电动蝶阀 Electric butterfly valve	DN900 PN=0.6MPa	Set 只	2	Q235a			
15	焊接钢管 Welded steel pipe	DN600 PN=1.0MPa	m 米	20	Q235a			
14	焊接钢管 Welded steel pipe	DN800 PN=1.0MPa	m 米	15	Q235a			
13	焊接钢管 Welded steel pipe	DN700 PN=0.6MPa	m 米	5	Q235a			
12	焊接钢管 Welded steel pipe	DN900 PN=0.6MPa	m 米	15	Q235a			
11	防水套管 Waterproof casing	D690×10 刚性A型	Set 只	2				
10	防水套管 Waterproof casing	D880×10 刚性A型	Set 只	2				
9	防水套管 Waterproof casing	D790×10 刚性A型	Set 只	2				
8	防水套管 Waterproof casing	D980×10 刚性A型	Set 只	2				
7	电手动启闭机 Electric manual hoist	QLD-4型，启闭力4t，0.75kW	Set 套	2				
6	铸铁闸门 Cast iron gate	SYM-1000型	Set 套	2				
5	绿化水泵 Green water pump	50WQ/E10-12-0.75 Q=5m³/h，H=15m N=0.75kW，V=380V	Set 套	2		Shanghai Kaiquan Pump Industry (Group) Co., Ltd. supplies, the contract has been fixed.	上海凯泉泵业(集团)有限公司供货，合同已定。	
4	潜水排污泵 Submersible sewage pump	50WQ/E10-20-1.5 Q=10m³/h，H=20m N=1.5kW，V=380V	Set 套	2		Shanghai Kaiquan Pump Industry (Group) Co., Ltd. supplies, the contract has been fixed.	上海凯泉泵业(集团)有限公司供货，合同已定。	
3	拦污栅 Trash rack	5m×6.4m，80°	Set 套	1		Shanghai Kaiquan Pump Industry (Group) Co., Ltd. supplies, the contract has been fixed.	上海凯泉泵业(集团)有限公司供货，合同已定。	
2	雨水泵及电机（小泵） Rain pump and motor (small pump)	KQSN400-M17S/385 Q=1620m³/h，H=40m N=250kW，V=380V	Set 套	2		Shanghai Kaiquan Pump Industry (Group) Co., Ltd. supplies, the contract has been fixed.	上海凯泉泵业(集团)有限公司供货，合同已定。	
1	雨水泵及电机（大泵） Rain pump and motor (big pump)	KQSN600-M20S/425 Q=3060m³/h，H=40m N=450kW，V=380V	Set 套	2		Shanghai Kaiquan Pump Industry (Group) Co., Ltd. supplies, the contract has been fixed.	上海凯泉泵业(集团)有限公司供货，合同已定。	

Reference Drawings

Drwg. No.	Title

Revisions

Name	Date	Notes

巴基斯坦默蒂亚里—拉合尔±660kV直流输电工程
±660kV HVDC Project from Matiari to Lahore in Pakistan

NATIONAL TRANSMISSION & DESPATCH COMPANY (NTDC) LIMITED PAKISTAN

CONTRACTOR 国家电网 STATE GRID 中国电力技术装备有限公司 CHINA ELECTRIC POWER EQUIPMENT AND TECHNOLOGY CO.,LTD.

SUBCONTRACTOR East China Electric Power Design Institute Co.,Ltd.

拉合尔±660kV换流站
±660kV Lahore Converter Station

设计阶段 PHASE: 施工图 Detail Design

M L H V D C - L C S - E C I - D D - S G - 0 3 0 2 - 0 1 1 A

	姓名 Name	日期 Date
设计 Designed	陈叶青	
校核 Checked		
审核 Reviewed		
批准 Approved		
比例 Scale		图号 DWG NO.

雨水泵站材料表
Rain pump station material table

30-B003701S-S0302-011

版本 REV. A

A3(420x297)